VITA | Fireplaces

Complete Vapor-Fire Collection

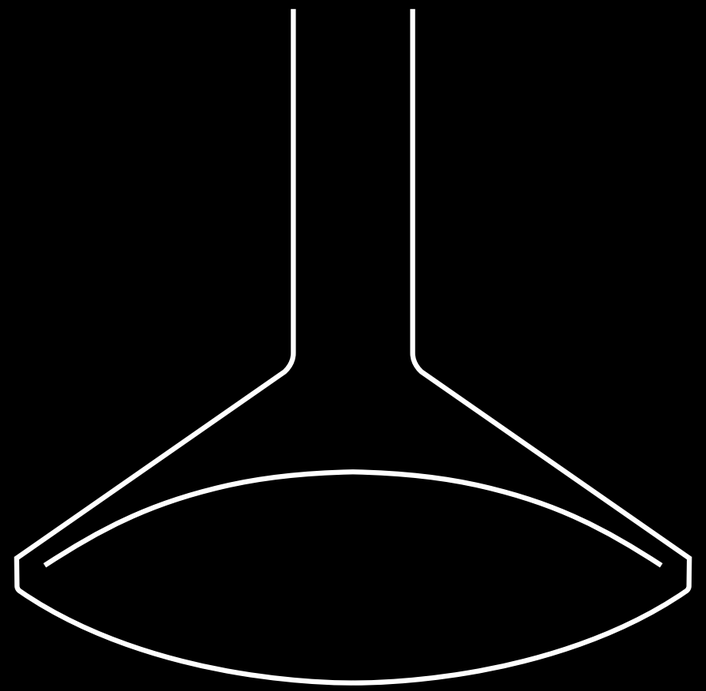

CF + D | custom fireplace design

www.customfireplacedesign.com

November 2026

CF + D | custom fireplace design



QUALITY | CREATIVITY | INNOVATION



VITA | Fireplaces

Featuring:

Vapor-Fire Technology

CF + D | custom fireplace design has mastered the skills and technology required to design and fabricate highly innovative, one-of-a-kind fireplaces often in dimensions and finishes that have been created for the first time. With a team of highly skilled craftsmen proficient in the art of shaping, fabricating and welding steel materials CF + D is committed to breaking the paradigms and pushing the boundaries of fireplace design possibilities. With enthusiasm and passion for our craft of custom designing and fabricating unique fireplaces, we outperform expectations providing solutions for our client's design criteria.

Now as a full design/build manufacturing company, CF + D is introducing their own production line of artistic contemporary designs.

VITA | Fireplaces: the first exclusive collection of uniquely designed and fabricated, suspended and built-in linear fireplaces incorporating the Vapor-Fire burner technology system. The discovery of this new technology which creates the illusion of a realistic fire flame using water vapor was the inspiration for our innovative VITA | Fireplaces.

Vapor-Fire uses regular tap water as a fuel source, creating a viable solution for installations in multi-family buildings, hospitality suites, lobbies, restaurants and private homes. Free from chimney venting requirements, zero combustible issues and no safety liabilities. All Vapor-Fire models are 100% efficient adding to your LEED Certification Score.

VITA | Fireplaces suspended models are available and certified in gas: (*Natural and Propane*).

Suspended Vapor-Fire

VITA | Fireplaces



Image shown is for illustration purpose and may include some optional features.

- Vapor-Fire burner technology
- Realistic flame without heat
- No chimney venting requirements
- Safe to the touch
- Fueled by regular tap water
  (softened/filtered water if required)
- 120 Volt 15 Amp-GFCI
- All fireplaces factory Flat Black finish
- Custom Client finishes are available by request. Sample required.
- Heat available, most models
- Dedicated wall switch required for operation
- Custom anchor options available

OPTION 1:
Plumbed-In to main source water line, ½" reduced to ¼" factory set connection.

OPTION 2:
Removable 1L container for manual fill approx. 8-10 hour burn time.

Recommended: Leak detection sensor for potential leak management.

AIDAN | Single-Sided Vapor-Fire

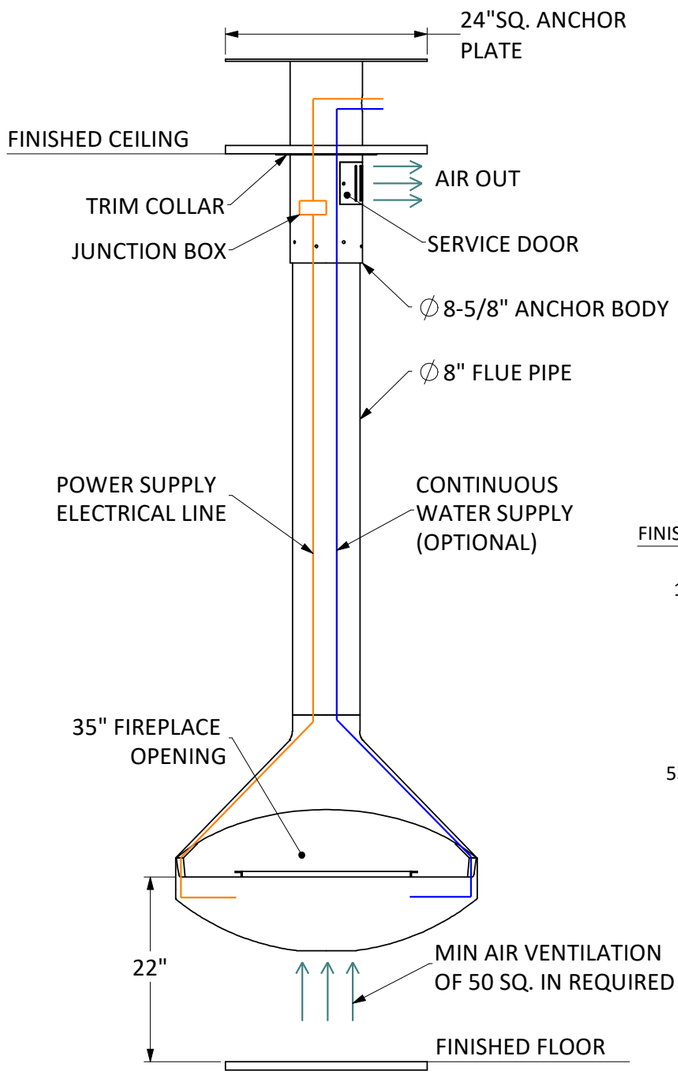

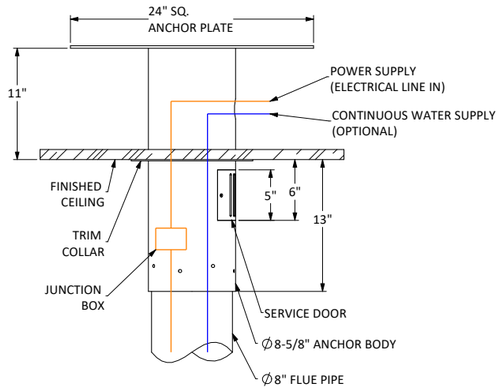

Standard Flat Anchor shown.

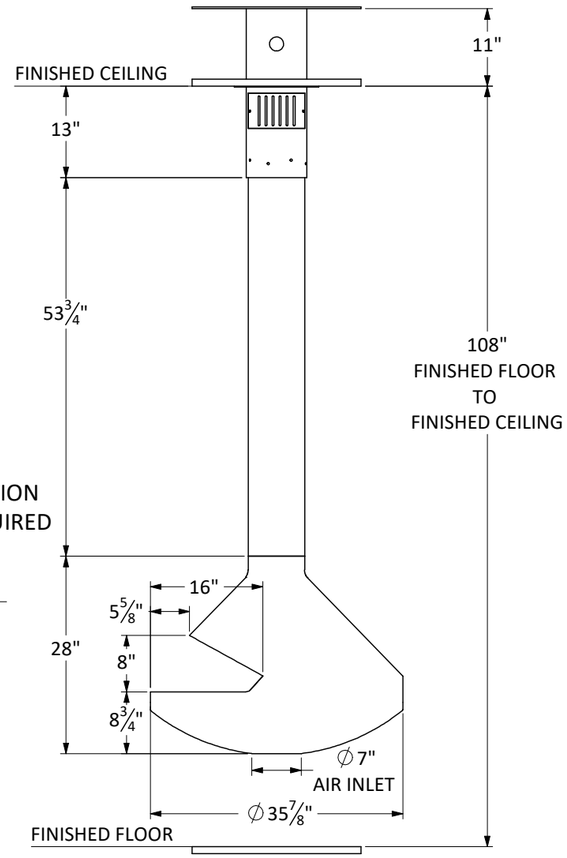

All dimensions are in Inches
Exact measurements may vary ±½".
Shown with standard 9 ft. ceiling application.

Fireplace Body	165 lbs.
Flue Pipe	11 lbs. per foot
Flat Anchor	77 lbs.

01/2026

VITA | Fireplaces



Image shown is for illustration purpose and may include some optional features.

- Vapor-Fire burner technology
- Realistic flame without heat
- No chimney venting requirements
- Safe to the touch
- Fueled by regular tap water
  (softened/filtered water if required)
- 120 Volt 15 Amp-GFCI
- All fireplaces factory Flat Black finish
- Custom Client finishes are available by request. Sample required.
- Heat available, most models
- Dedicated wall switch required for operation
- Custom anchor options available

OPTION 1:
Plumbed-In to main source water line, ½" reduced to ¼" factory set connection.

OPTION 2:
Removable 1L container for manual fill approx. 8-10 hour burn time.

Recommended: Leak detection sensor for potential leak management.

AIDAN | See-Thru Vapor-Fire

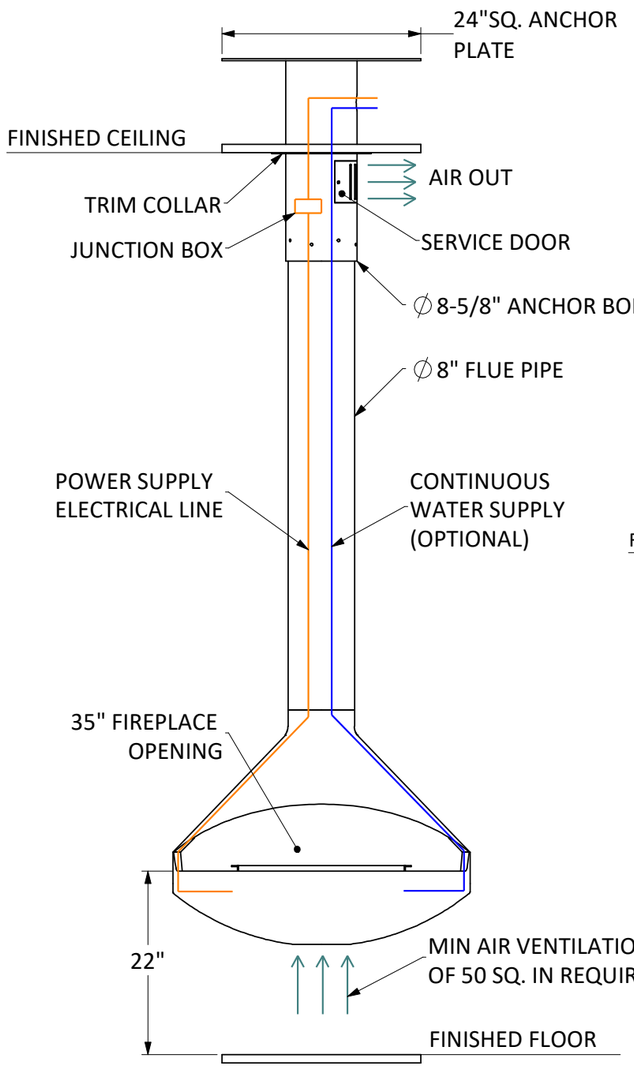

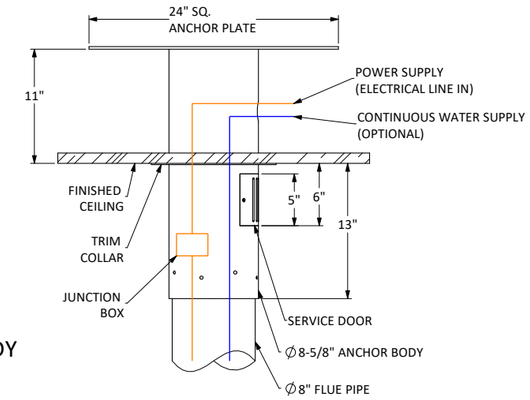

STANDARD ANCHOR
Standard Flat Anchor shown.

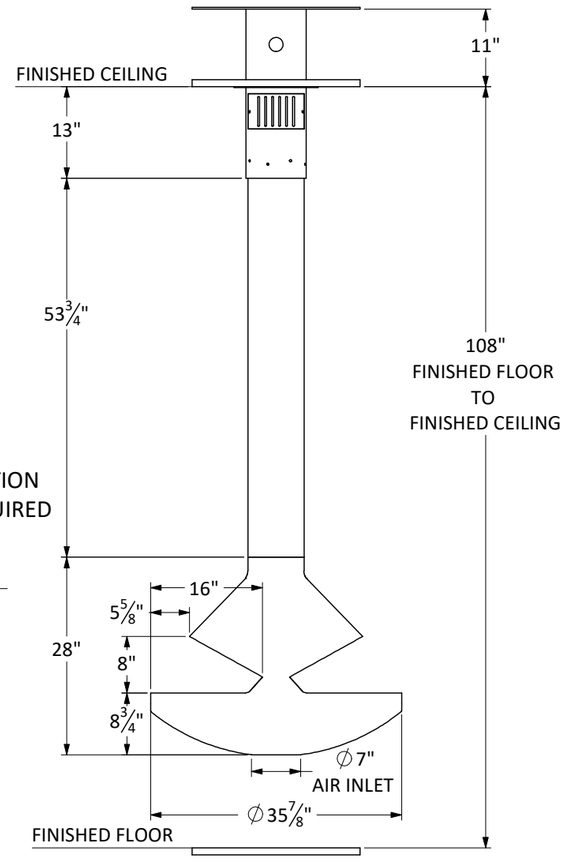

All dimensions are in Inches
Exact measurements may vary ±½".
Shown with standard 9 ft. ceiling application.

Fireplace Body	155 lbs.
Flue Pipe	11 lbs. per foot
Flat Anchor	77 lbs.

01/2026

VITA | Fireplaces



Image shown is for illustration purpose and may include some optional features.

- Vapor-Fire burner technology
- Realistic flame without heat
- No chimney venting requirements
- Safe to the touch
- Fueled by regular tap water
  (softened/filtered water if required)
- 120 Volt 15 Amp-GFCI
- All fireplaces factory Flat Black finish
- Custom Client finishes are available by request. Sample required.
- Heat available, most models
- Dedicated wall switch required for operation
- Custom anchor options available

OPTION 1:
Plumbed-In to main source water line, ½" reduced to ¼" factory set connection.

OPTION 2:
Removable 1L container for manual fill approx. 8-10 hour burn time.

Recommended: Leak detection sensor for potential leak management.

CALLISTA | Single-Sided Vapor-Fire

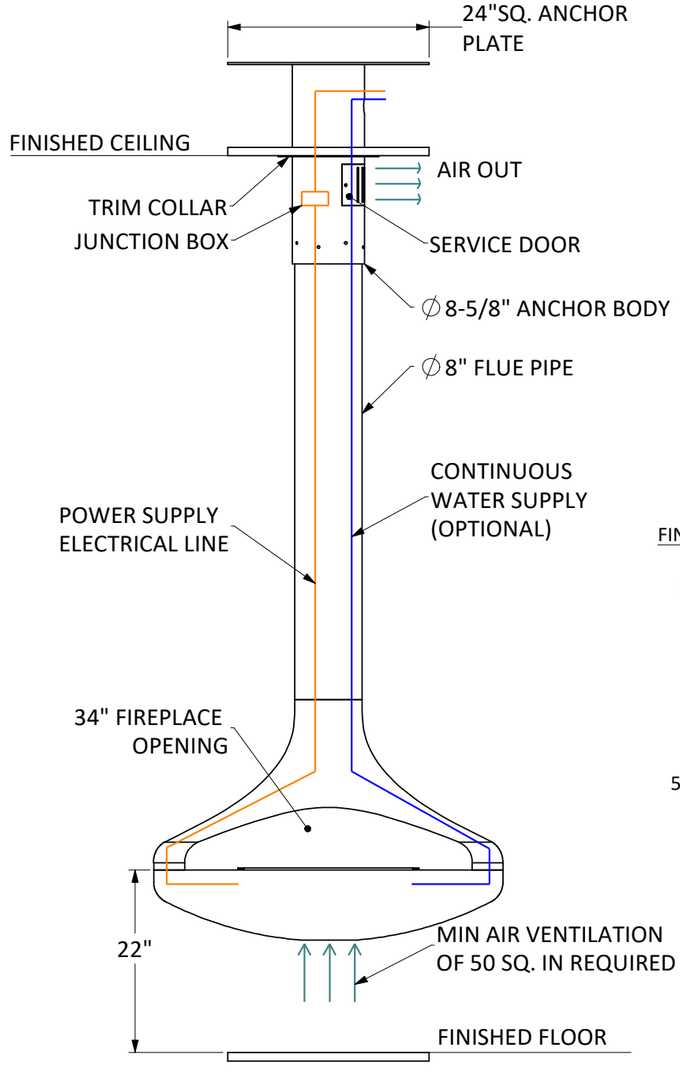

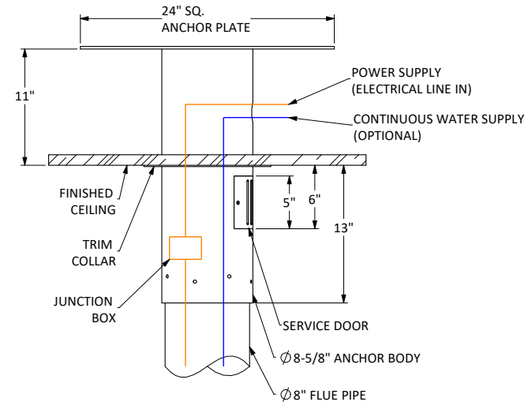

STANDARD ANCHOR
Standard Flat Anchor shown.

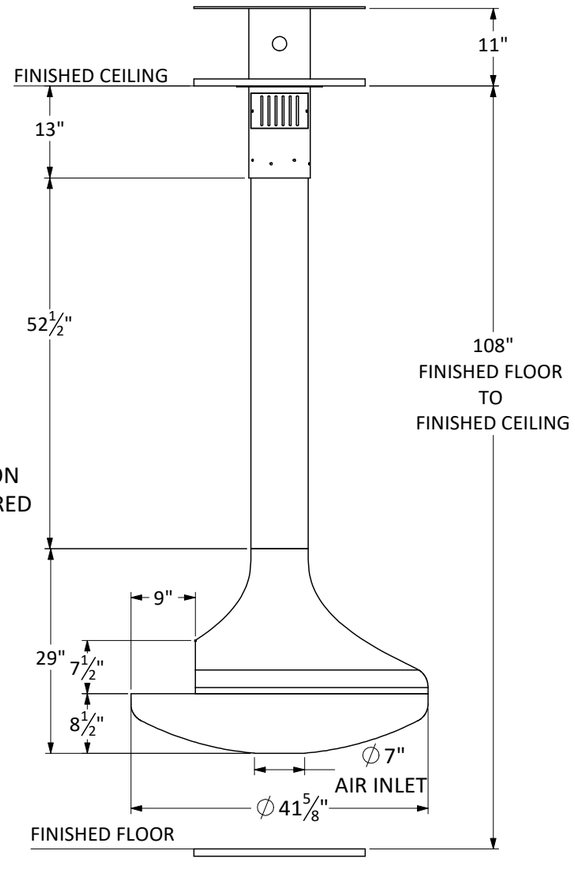

All dimensions are in Inches
Exact measurements may vary ±½".
Shown with standard 9 ft. ceiling application.

Fireplace Body	200 lbs.
Flue Pipe	11 lbs. per foot
Flat Anchor	77 lbs.

01/2026

VITA | Fireplaces



Image shown is for illustration purpose and may include some optional features.

- Vapor-Fire burner technology
- Realistic flame without heat
- No chimney venting requirements
- Safe to the touch
- Fueled by regular tap water
  (softened/filtered water if required)
- 120 Volt 15 Amp-GFCI
- All fireplaces factory Flat Black finish
- Custom Client finishes are available by request. Sample required.
- Heat available, most models
- Dedicated wall switch required for operation
- Custom anchor options available

OPTION 1:
Plumbed-In to main source water line, ½" reduced to ¼" factory set connection.

OPTION 2:
Removable 1L container for manual fill approx. 8-10 hour burn time.

Recommended: Leak detection sensor for potential leak management.

CALLISTA | Double-Sided Vapor-Fire

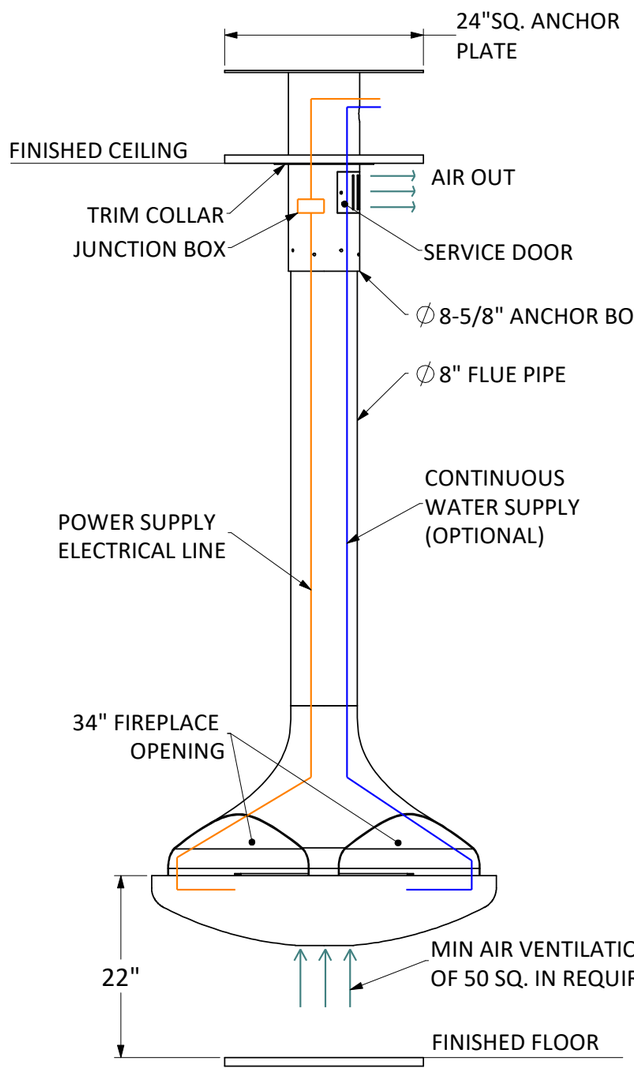

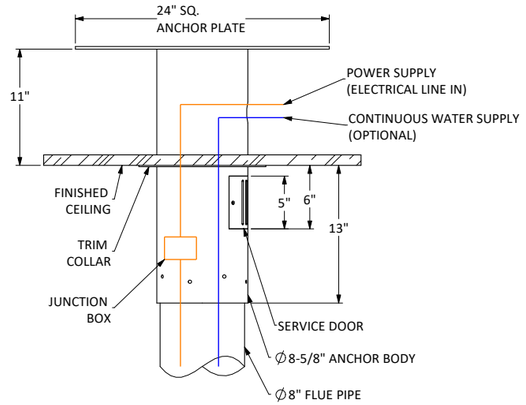

STANDARD ANCHOR
Standard Flat Anchor shown.

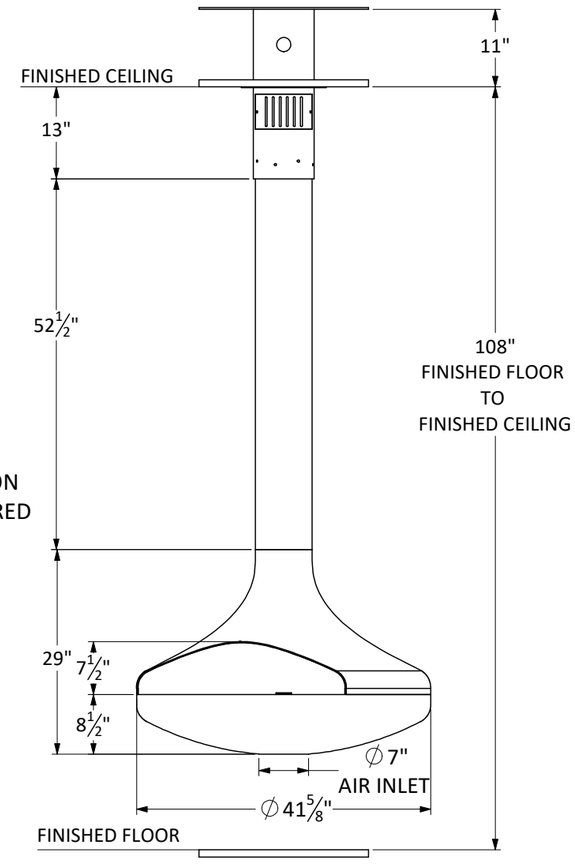

All dimensions are in Inches
Exact measurements may vary ±½".
Shown with standard 9 ft. ceiling application.

Fireplace Body	190 lbs.
Flue Pipe	11 lbs. per foot
Flat Anchor	77 lbs.

01/2026

VITA | Fireplaces



Image shown is for illustration purpose and may include some optional features.

- Vapor-Fire burner technology
- Realistic flame without heat
- No chimney venting requirements
- Safe to the touch
- Fueled by regular tap water
  (softened/filtered water if required)
- 120 Volt 15 Amp-GFCI
- All fireplaces factory Flat Black finish
- Custom Client finishes are available by request. Sample required.
- Heat available, most models
- Dedicated wall switch required for operation
- Custom anchor options available

OPTION 1:
Plumbed-In to main source water line, ½" reduced to ¼" factory set connection.

OPTION 2:
Removable 1L container for manual fill approx. 8-10 hour burn time.

Recommended: Leak detection sensor for potential leak management.

CALLISTA | Triple-Sided Vapor-Fire

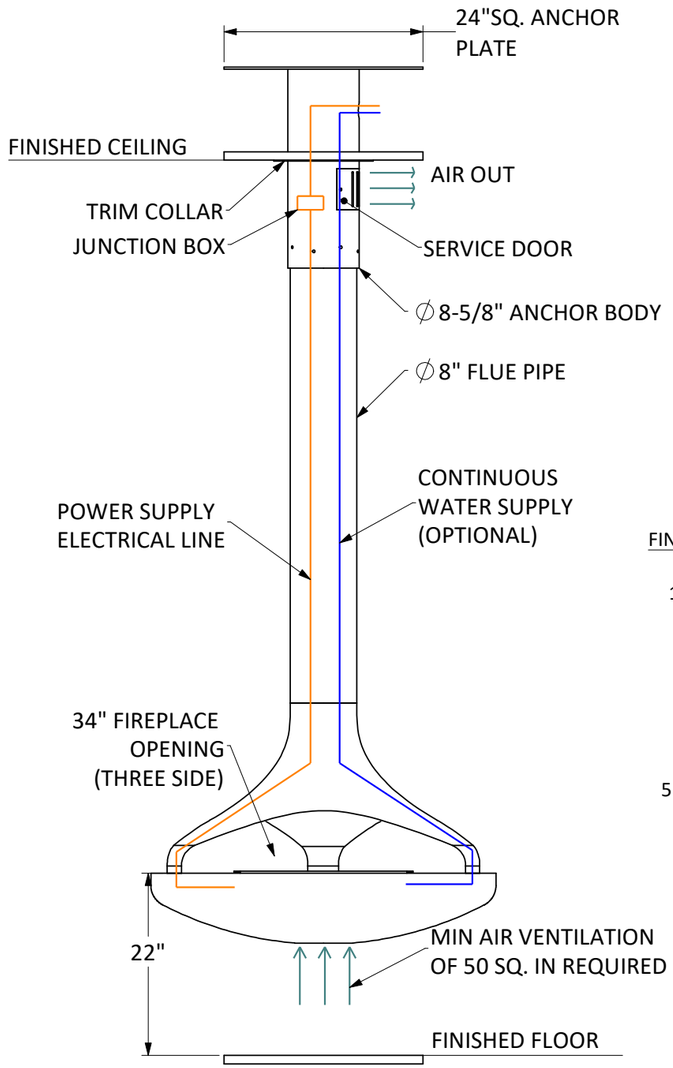

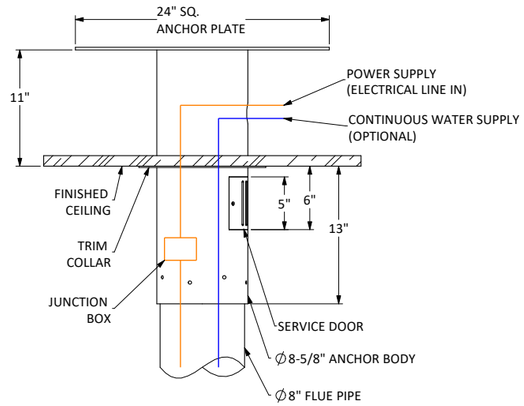

STANDARD ANCHOR
Standard Flat Anchor shown.

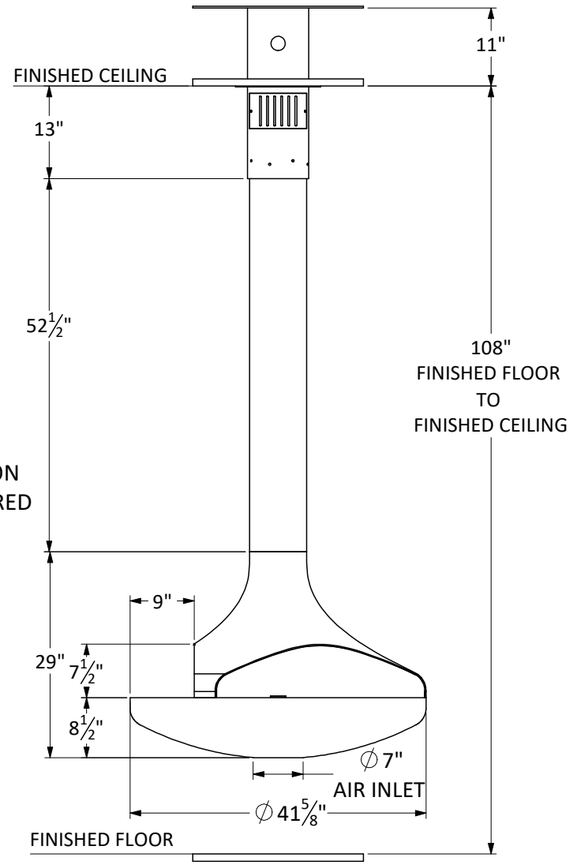

All dimensions are in Inches
Exact measurements may vary ±½".
Shown with standard 9 ft. ceiling application.

Fireplace Body	180 lbs.
Flue Pipe	11 lbs. per foot
Flat Anchor	77 lbs.

04/2026

VITA | Fireplaces



Image shown is for illustration purpose and may include some optional features.

- Vapor-Fire burner technology
- Realistic flame without heat
- No chimney venting requirements
- Safe to the touch
- Fueled by regular tap water
  (softened/filtered water if required)
- 120 Volt 15 Amp-GFCI
- All fireplaces factory Flat Black finish
- Custom Client finishes are available by request. Sample required.
- Heat available, most models
- Dedicated wall switch required for operation
- Custom anchor options available

OPTION 1:
Plumbed-In to main source water line, ½" reduced to ¼" factory set connection.

OPTION 2:
Removable 1L container for manual fill approx. 8-10 hour burn time.

Recommended: Leak detection sensor for potential leak management.

GIOIA | Single-Sided Vapor-Fire

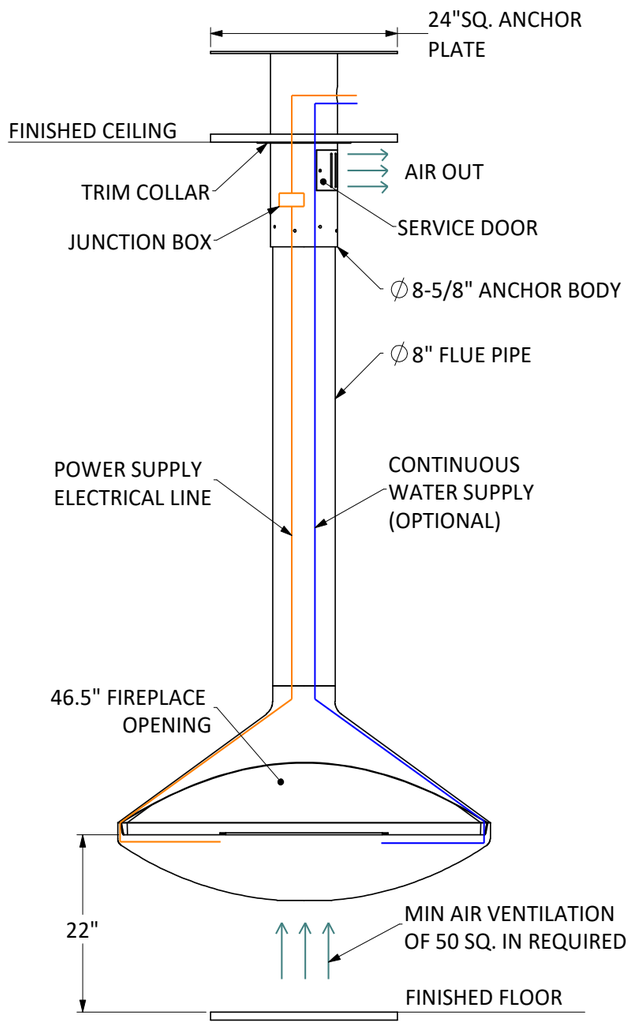

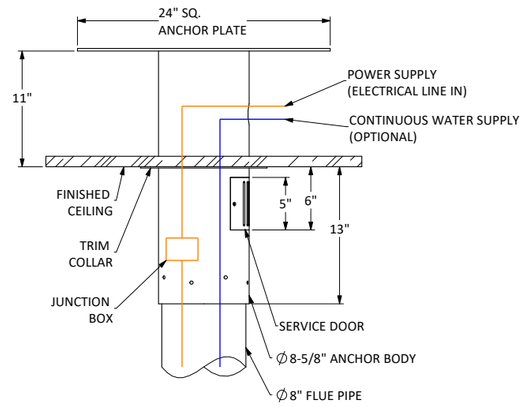

STANDARD ANCHOR
Standard Flat Anchor shown.

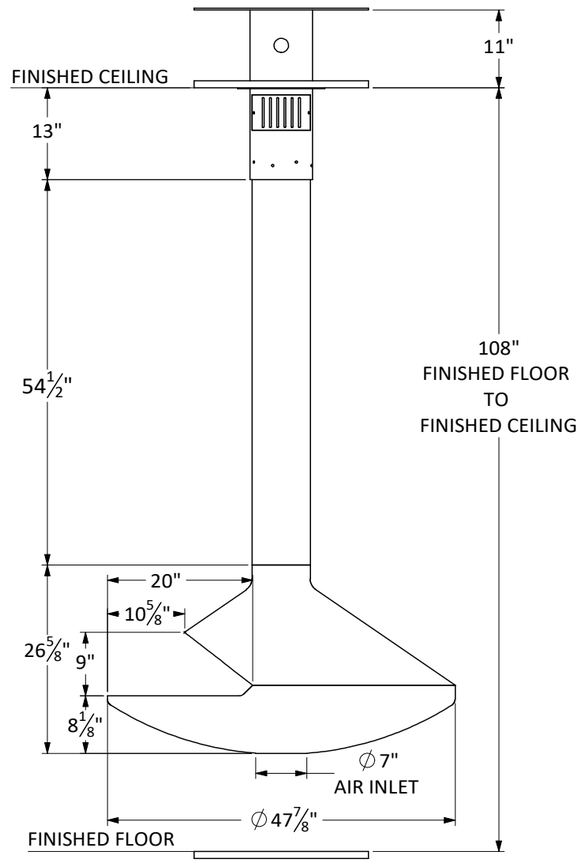

All dimensions are in Inches
Exact measurements may vary ±½".
Shown with standard 9 ft. ceiling application.

Fireplace Body	250 lbs.
Flue Pipe	11 lbs. per foot
Flat Anchor	77 lbs.

01/2026

VITA | Fireplaces



Image shown is for illustration purpose and may include some optional features.

- Vapor-Fire burner technology
- Realistic flame without heat
- No chimney venting requirements
- Safe to the touch
- Fueled by regular tap water
  (softened/filtered water if required)
- 120 Volt 15 Amp-GFCI
- All fireplaces factory Flat Black finish
- Custom Client finishes are available by request. Sample required.
- Heat available, most models
- Dedicated wall switch required for operation
- Custom anchor options available

OPTION 1:
Plumbed-In to main source water line, ½" reduced to ¼" factory set connection.

OPTION 2:
Removable 1L container for manual fill approx. 8-10 hour burn time.

Recommended: Leak detection sensor for potential leak management.

GIOIA | See-Thru Vapor-Fire

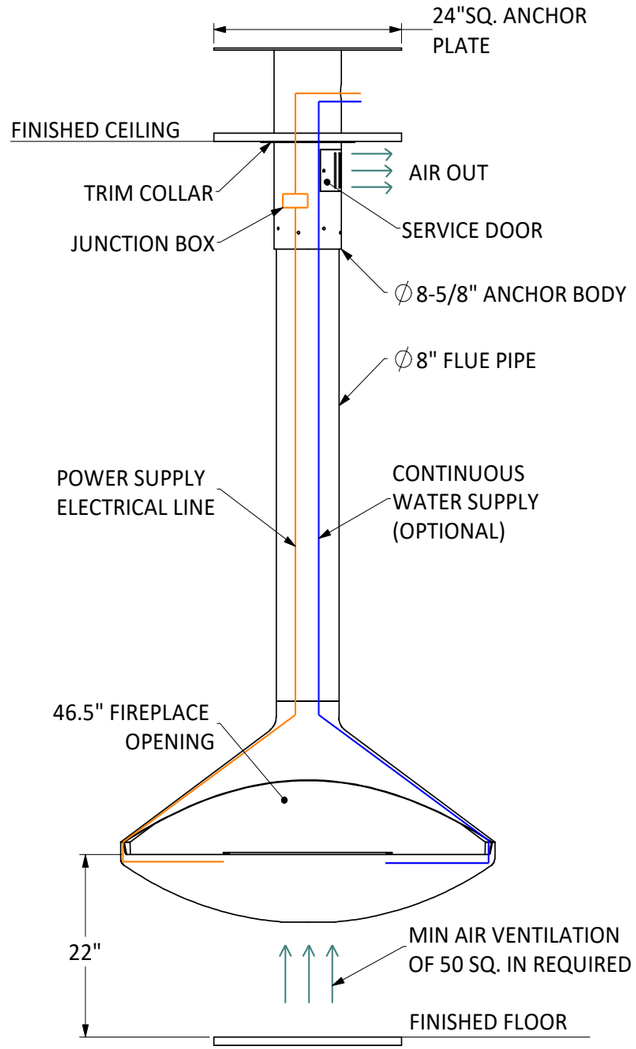

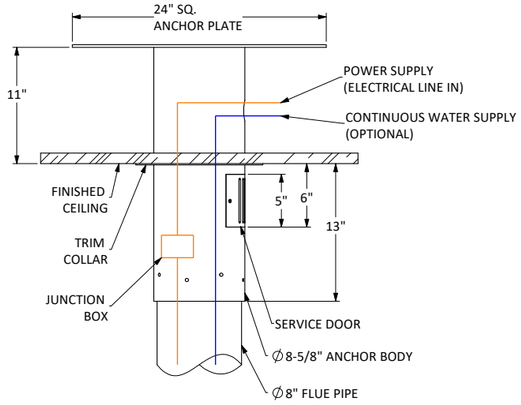

STANDARD ANCHOR
Standard Flat Anchor shown.

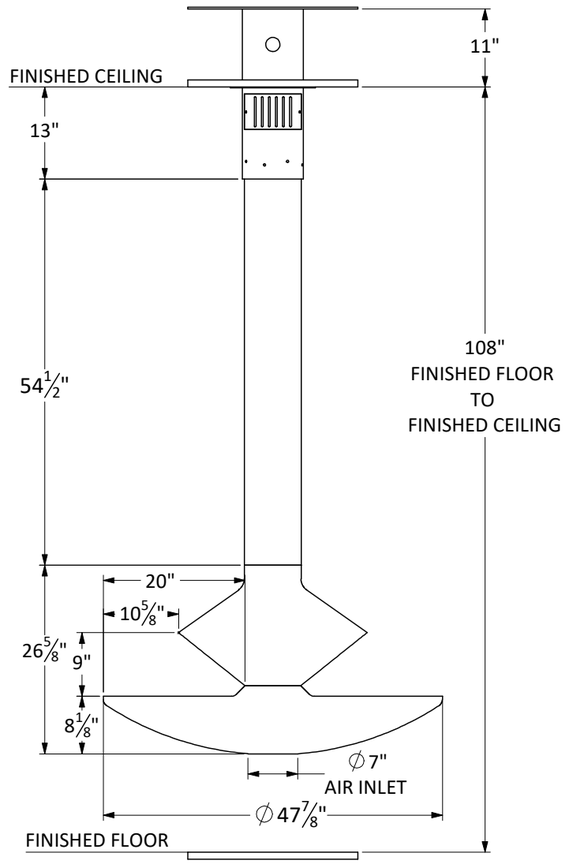

All dimensions are in Inches
Exact measurements may vary ±½".
Shown with standard 9 ft. ceiling application.

Fireplace Body	240 lbs.
Flue Pipe	11 lbs. per foot
Flat Anchor	77 lbs.

01/2026

VITA | Fireplaces



Image shown is for illustration purpose and may include some optional features.

- Vapor-Fire burner technology
- Realistic flame without heat
- No chimney venting requirements
- Safe to the touch
- Fueled by regular tap water
  (softened/filtered water if required)
- 120 Volt 15 Amp-GFCI
- All fireplaces factory Flat Black finish
- Custom Client finishes are available by request. Sample required.
- Heat available, most models
- Dedicated wall switch required for operation
- Custom anchor options available

OPTION 1:
Plumbed-In to main source water line, ½" reduced to ¼" factory set connection.

OPTION 2:
Removable 1L container for manual fill approx. 8-10 hour burn time.

Recommended: Leak detection sensor for potential leak management.

LUCIJA Single-Sided | Vapor-Fire

All dimensions are in Inches
Exact measurements may vary ±½".
Shown with standard 9 ft. ceiling application.

Fireplace Body	235 lbs.
Flue Pipe	11 lbs. per foot
Flat Anchor	77 lbs.

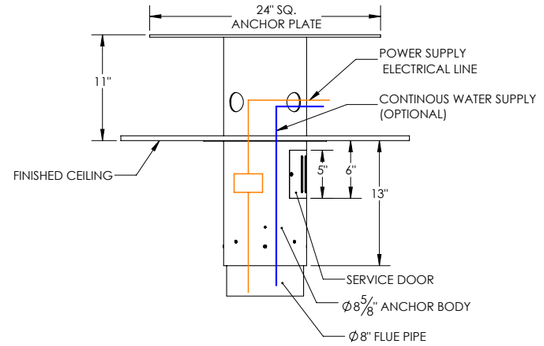

STANDARD FLAT ANCHOR

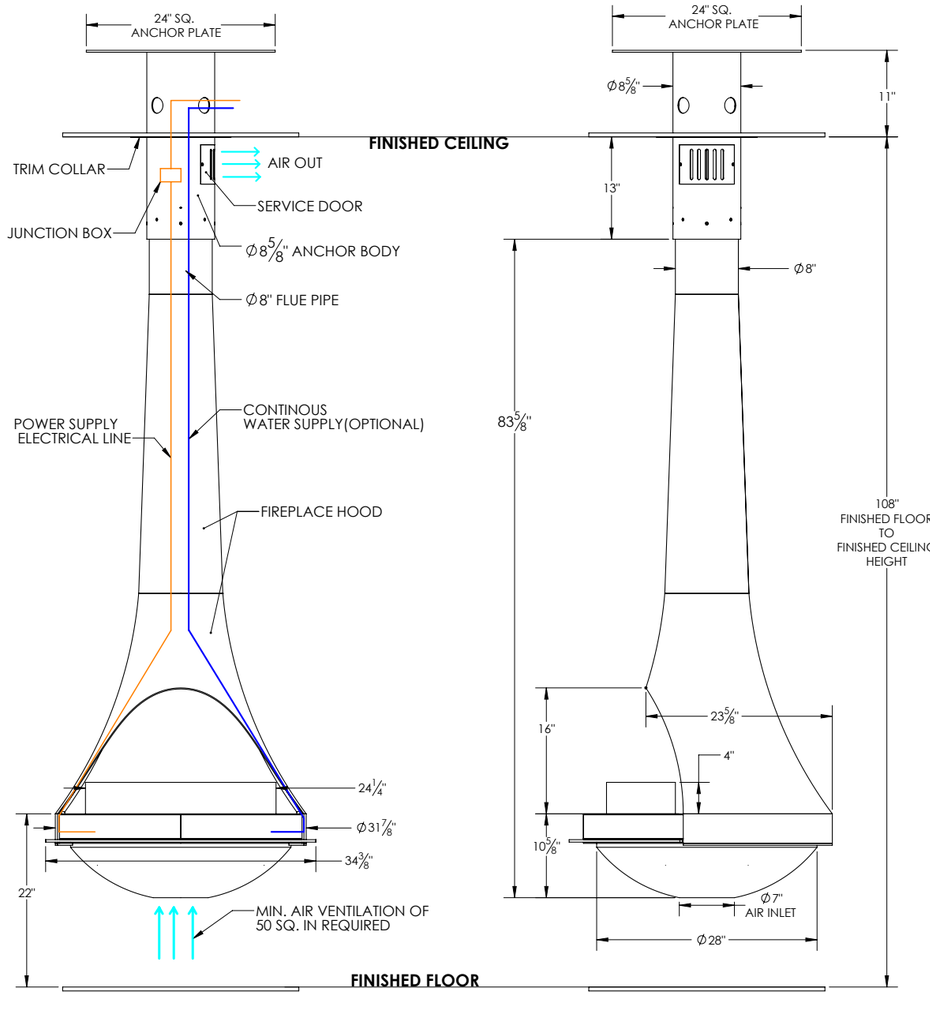

01/2026

VITA | Fireplaces



Image shown is for illustration purpose and may include some optional features.

- Vapor-Fire burner technology
- Realistic flame without heat
- No chimney venting requirements
- Safe to the touch
- Fueled by regular tap water
  (softened/filtered water if required)
- 120 Volt 15 Amp-GFCI
- All fireplaces factory Flat Black finish
- Custom Client finishes are available by request. Sample required.
- Heat available, most models
- Dedicated wall switch required for operation
- Custom anchor options available

OPTION 1:
Plumbed-In to main source water line, ½" reduced to ¼" factory set connection.

OPTION 2:
Removable 1L container for manual fill approx. 8-10 hour burn time.

Recommended: Leak detection sensor for potential leak management.

LUCIJA See-Thru | Vapor-Fire

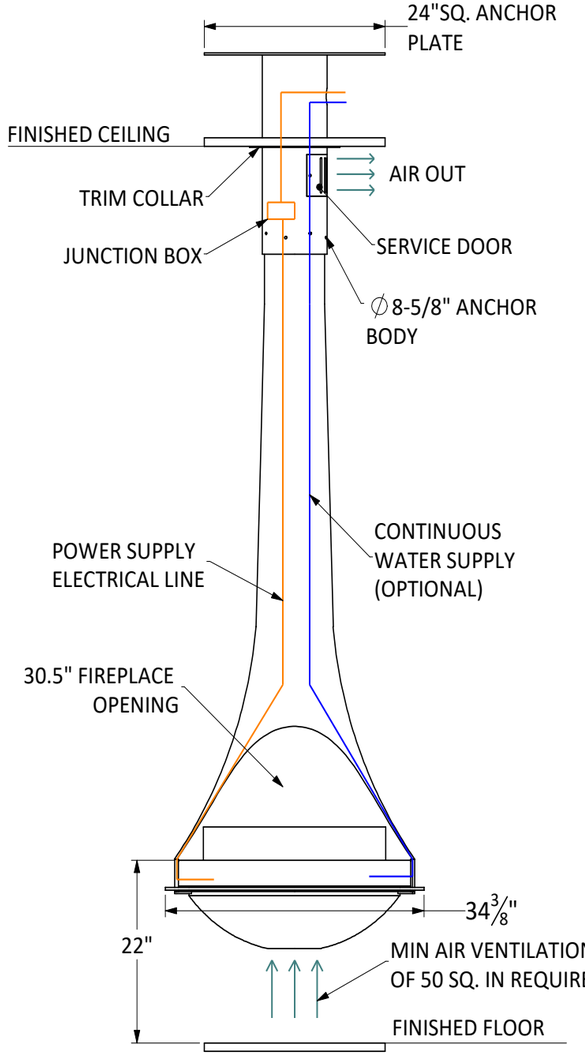

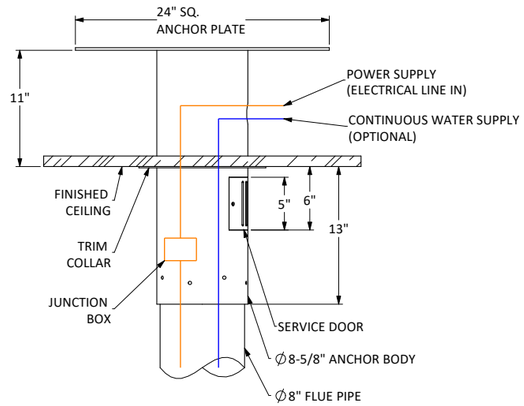

STANDARD ANCHOR
Standard Flat Anchor shown.

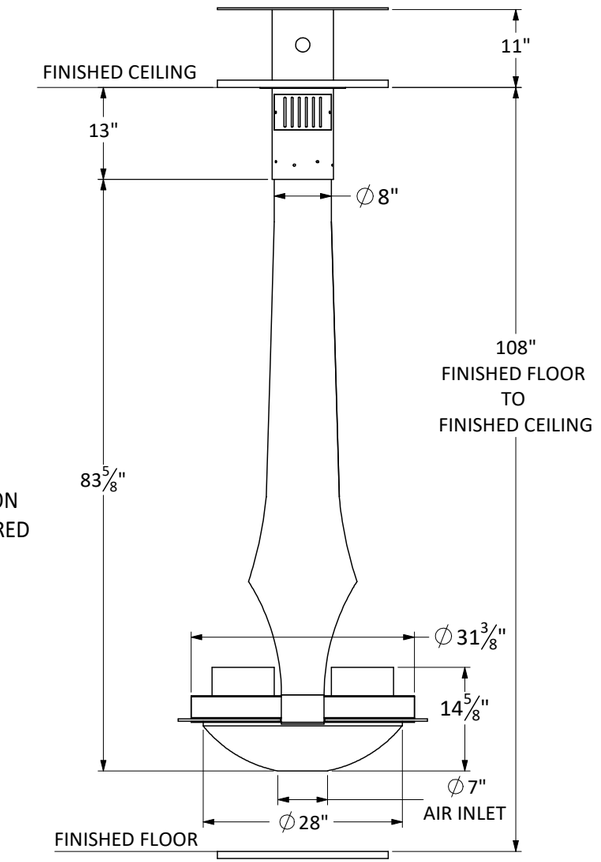

All dimensions are in Inches
Exact measurements may vary ±½".
Shown with standard 9 ft. ceiling application.

Fireplace Body	150 lbs.
Flue Pipe	11 lbs. per foot
Flat Anchor	77 lbs.

01/2026

VITA | Fireplaces



Image shown is for illustration purpose and may include some optional features.

- Vapor-Fire burner technology
- Realistic flame without heat
- No chimney venting requirements
- Safe to the touch
- Fueled by regular tap water
  (softened/filtered water if required)
- 120 Volt 15 Amp-GFCI
- All fireplaces factory Flat Black finish
- Custom Client finishes are available by request. Sample required.
- Heat available, most models
- Dedicated wall switch required for operation
- Custom anchor options available

OPTION 1:
Plumbed-In to main source water line, ½" reduced to ¼" factory set connection.

OPTION 2:
Removable 1L container for manual fill approx. 8-10 hour burn time.

Recommended: Leak detection sensor for potential leak management.

TEIA | Vapor-Fire

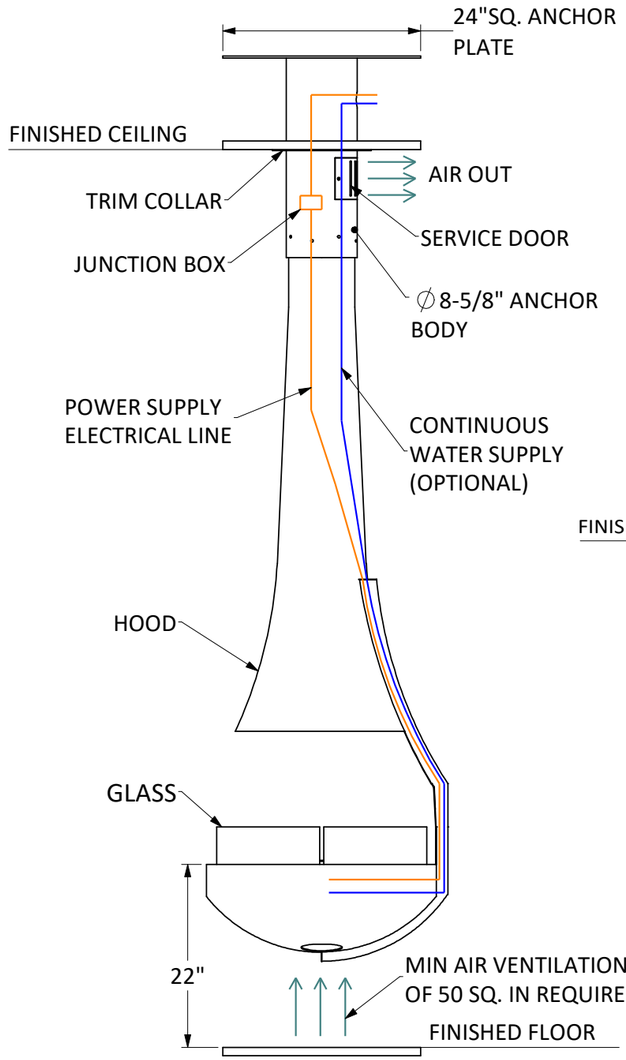

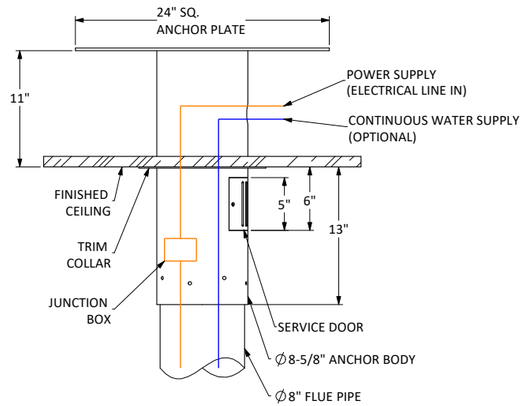

Standard Flat Anchor shown.

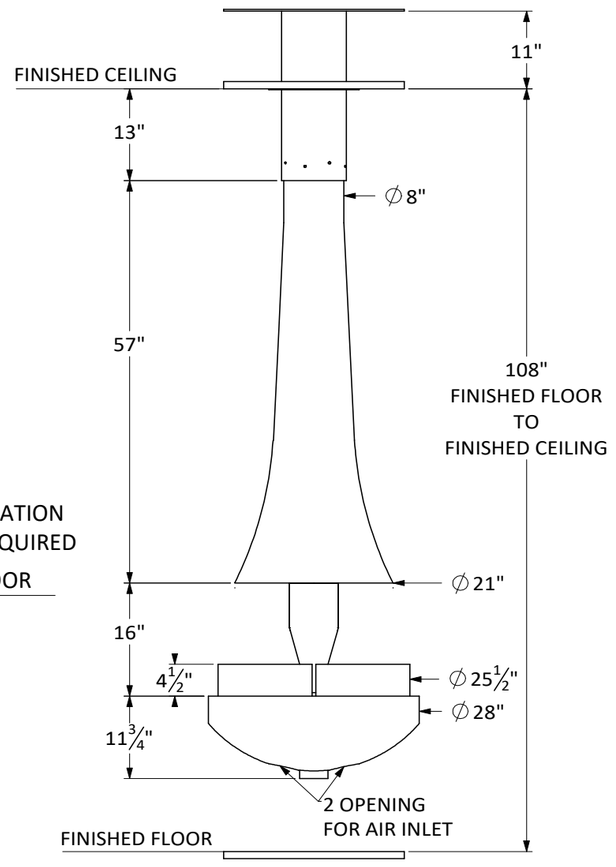

All dimensions are in Inches
Exact measurements may vary ±½".
Shown with standard 9 ft. ceiling application.

Fireplace Body	150 lbs.
Flue Pipe	11 lbs. per foot
Flat Anchor	77 lbs.

01/2026

VITA | Fireplaces



Image shown is for illustration purpose and may include some optional features.

- Vapor-Fire burner technology
- Realistic flame without heat
- No chimney venting requirements
- Safe to the touch
- Fueled by regular tap water
  (softened/filtered water if required)
- 120 Volt 15 Amp-GFCI
- All fireplaces factory Flat Black finish
- Custom Client finishes are available by request. Sample required.
- Heat available, most models
- Dedicated wall switch required for operation
- Custom anchor options available

OPTION 1:
Plumbed-In to main source water line, ½" reduced to ¼" factory set connection.

OPTION 2:
Removable 1L container for manual fill approx. 8-10 hour burn time.

Recommended: Leak detection sensor for potential leak management.

MONROE | See-Thru Vapor-Fire

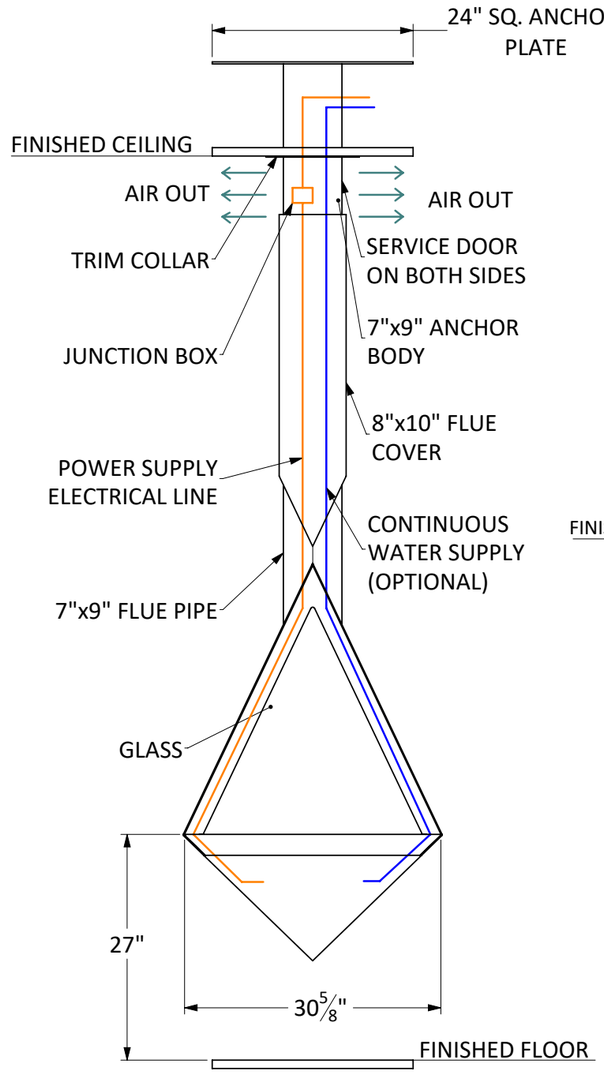

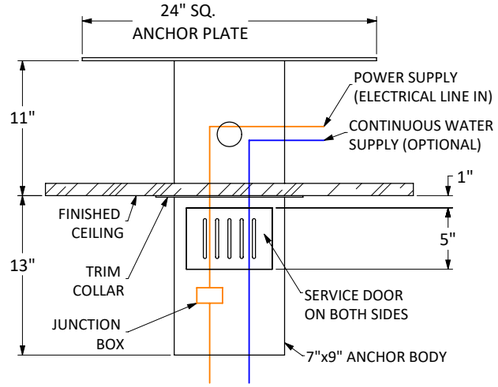

Standard Flat Anchor shown.

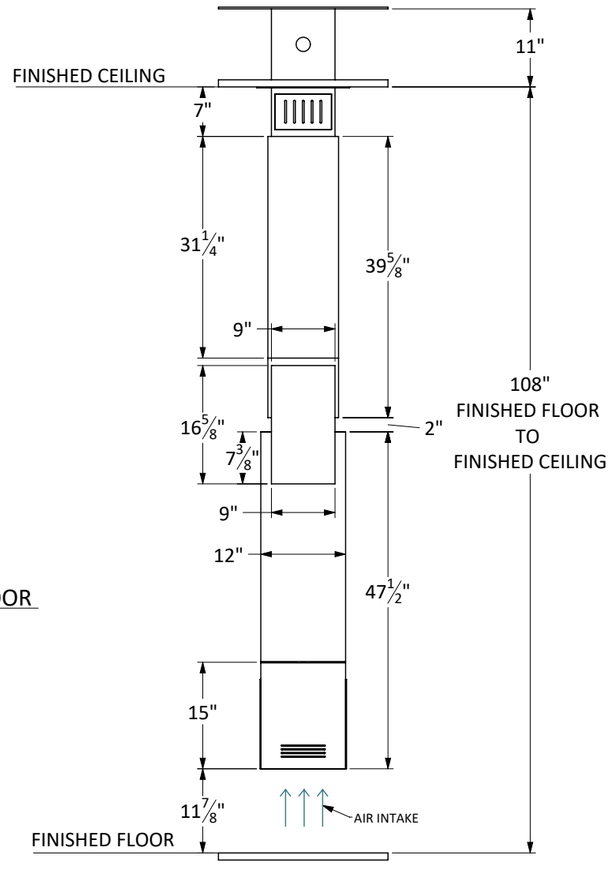

All dimensions are in Inches
Exact measurements may vary ±½".
Shown with standard 9 ft. ceiling application.

Fireplace Body	150 lbs.
Flue Pipe	11 lbs. per foot
Flat Anchor	77 lbs.

01/2026

VITA | Fireplaces



Image shown is for illustration purpose and may include some optional features.

- Vapor-Fire burner technology
- Realistic flame without heat
- No chimney venting requirements
- Safe to the touch
- Fueled by regular tap water (softened/filtered water if required)
- 120 Volt 15 Amp-GFCI
- Main electrical and optional continuous water line to feed from floor to junction box located inside fireplace base.
- All fireplaces factory Flat Black finish
- Custom Client finishes are available by request. Sample required.
- Heat available, most models
- Dedicated wall switch required for operation
- Custom anchor options available

OPTION 1:
Plumbed-In to main source water line, ½" reduced to ¼" factory set connection.

OPTION 2:
Removable 1L container for manual fill approx. 8-10 hour burn time.

Recommended: ¾" drain line to a 1½" floor drain OR condensate pump OR moisture alarm for potential leak management. (Not mandatory)

BELLA | Suspended Hood with Base Vapor-Fire

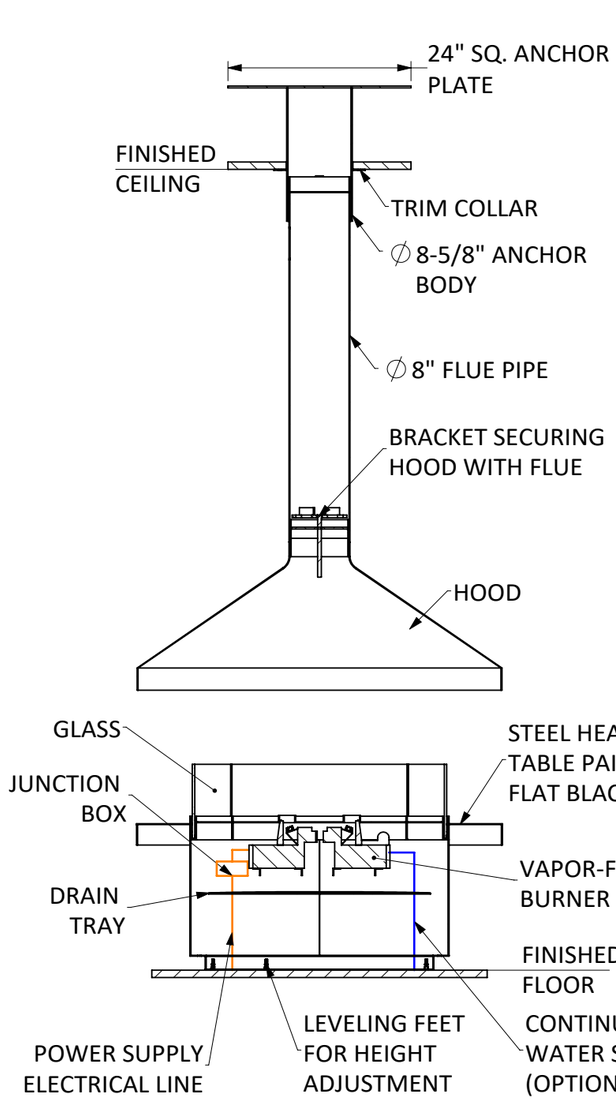

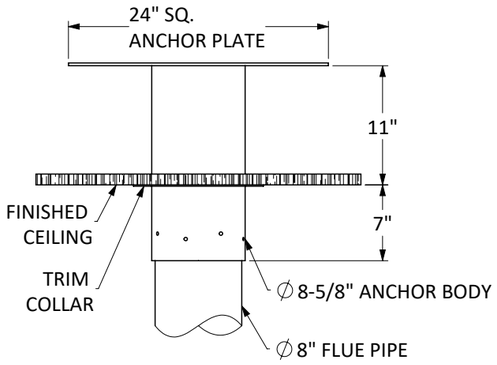

Standard Flat Anchor shown.

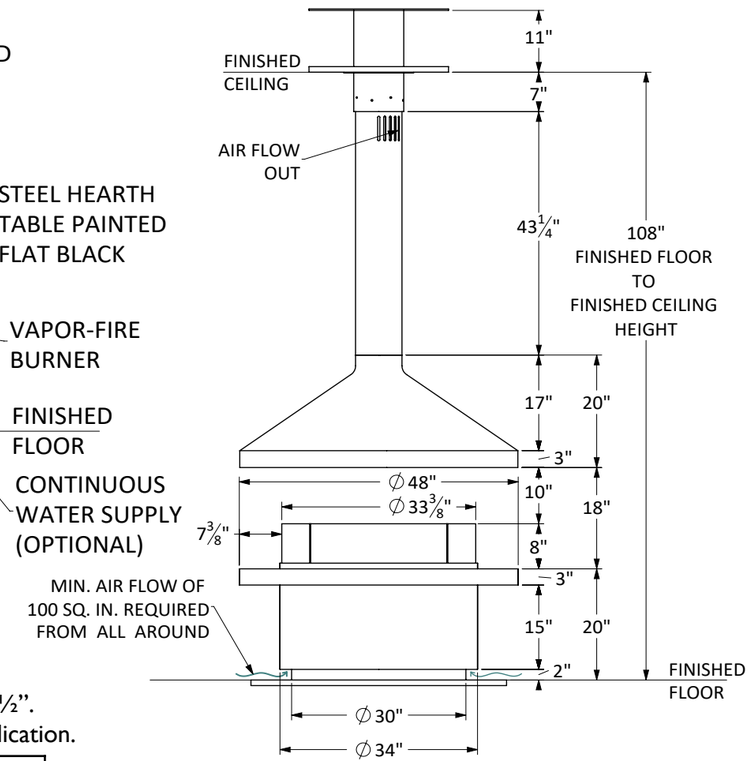

All dimensions are in Inches
Exact measurements may vary ±½".
Shown with standard 9 ft. ceiling application.

Fireplace Base	165 lbs.
Flue Pipe and Hood	135 lbs.
Flat Anchor	77 lbs.

01/2026

VITA | Fireplaces



Image shown is for illustration purpose and may include some optional features.

- Vapor-Fire burner technology
- Realistic flame without heat
- No chimney venting requirements
- Safe to the touch
- Fueled by regular tap water (softened/filtered water if required)
- 120 Volt 15 Amp-GFCI
- Main electrical and optional continuous water line to feed from floor to junction box located inside fireplace base.
- All fireplaces factory Flat Black finish
- Custom Client finishes are available by request. Sample required.
- Heat available, most models
- Dedicated wall switch required for operation
- Custom anchor options available

OPTION 1:
Plumbed-In to main source water line, ½" reduced to ¼" factory set connection.

OPTION 2:
Removable 1L container for manual fill approx. 8-10 hour burn time.

Recommended: ¾" drain line to a 1½" floor drain OR condensate pump OR moisture alarm for potential leak management. (Not mandatory)

NICO | Suspended Hood with Base Vapor-Fire

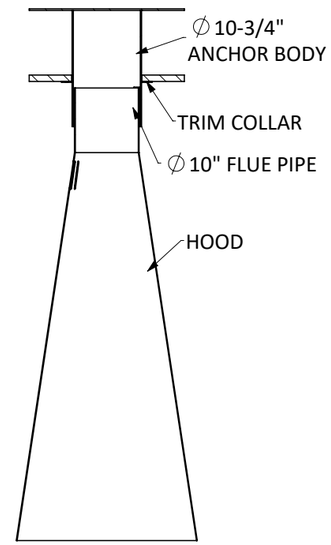

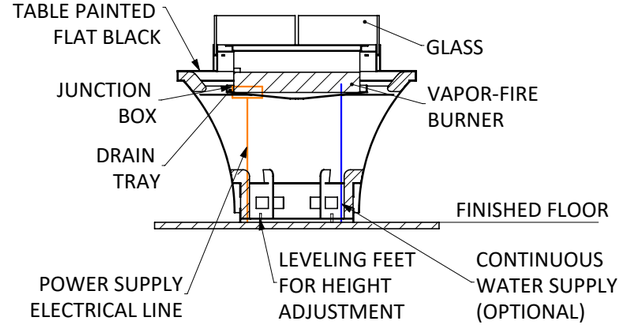

SECTION VIEW

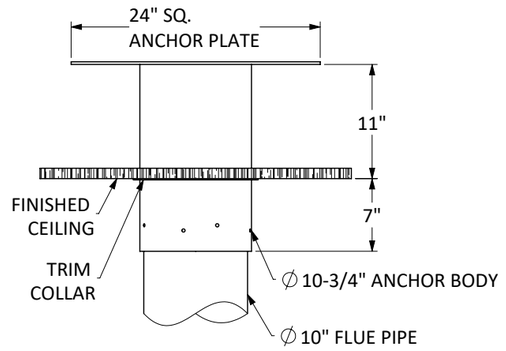

Standard Flat Anchor shown.

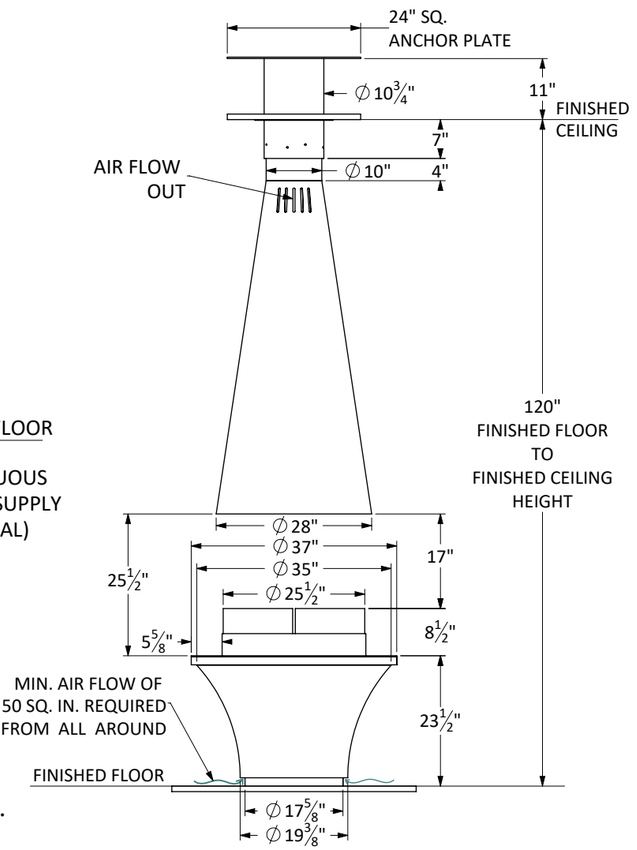

All dimensions are in Inches
Exact measurements may vary ±½".
Shown with standard 10 ft. ceiling application.

Fireplace Base	200 lbs.
Flue Pipe and Hood	140 lbs.
Flat Anchor	75 lbs.

01/2026

VITA | Fireplaces



Image shown is for illustration purpose and may include some optional features.

- Vapor-Fire burner technology
- Realistic flame without heat
- No chimney venting requirements
- Safe to the touch
- Fueled by regular tap water (softened/filtered water if required)
- 120 Volt 15 Amp-GFCI
- Main electrical and optional continuous water line to feed from floor to junction box located inside fireplace base.
- All fireplaces factory Flat Black finish
- Custom Client finishes are available by request. Sample required.
- Heat available, most models
- Dedicated wall switch required for operation
- Custom anchor options available

OPTION 1:
Plumbed-In to main source water line, ½" reduced to ¼" factory set connection.

OPTION 2:
Removable 1L container for manual fill approx. 8-10 hour burn time.

Recommended: ¾" drain line to a 1½" floor drain OR condensate pump OR moisture alarm for potential leak management. (Not mandatory)

MYSTIQUE | Suspended Hood with Base Vapor-Fire

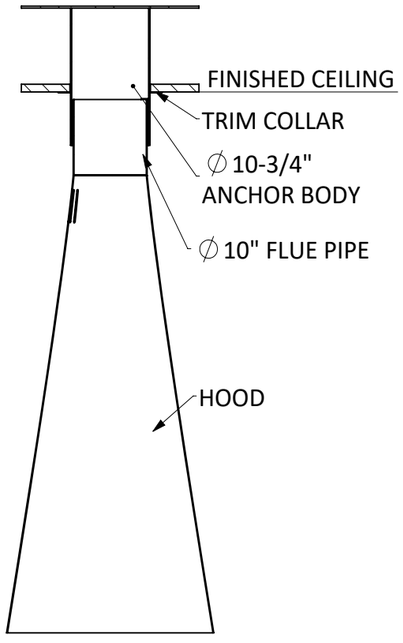

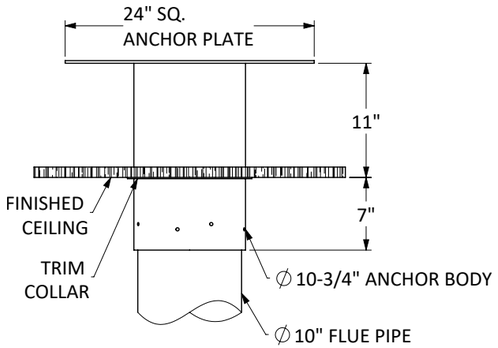

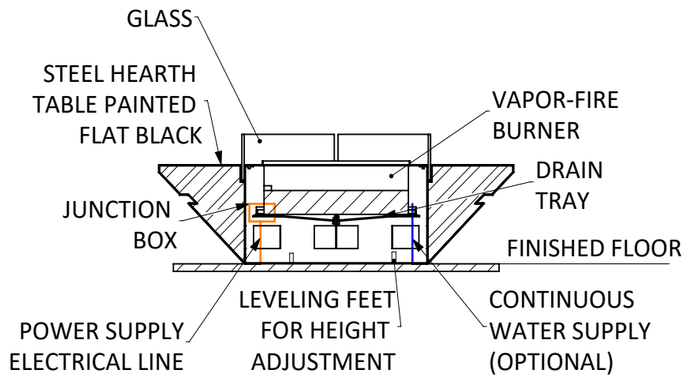

SECTION VIEW

Standard Flat Anchor shown.

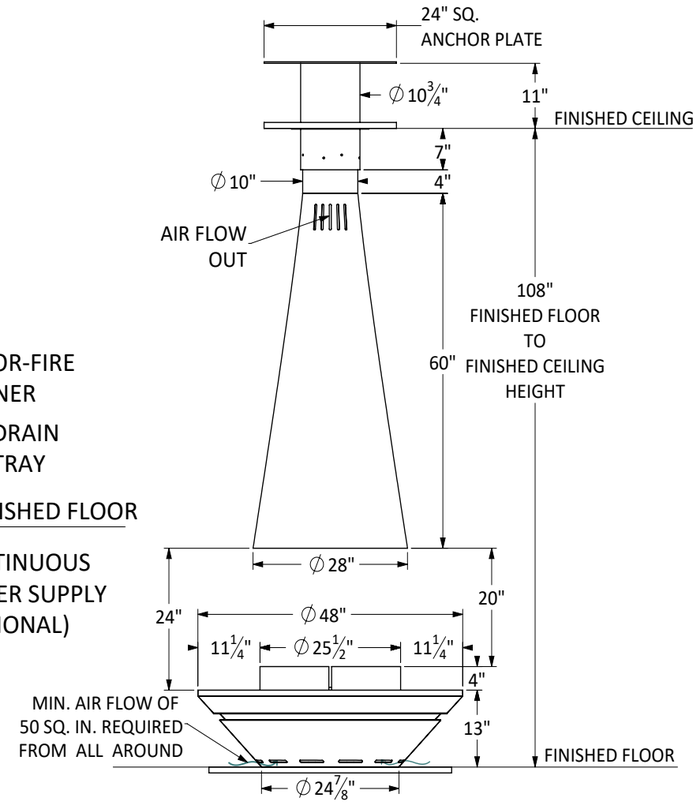

All dimensions are in Inches
Exact measurements may vary ±½".
Shown with standard 9 ft. ceiling application.

Fireplace Base	230 lbs.
Flue Pipe and Hood	140 lbs.
Flat Anchor	75 lbs.

01/2026

VITA | Fireplaces



Image shown is for illustration purpose and may include some optional features.

- Vapor-Fire burner technology
- Realistic flame without heat
- No chimney venting requirements
- Safe to the touch
- Fueled by regular tap water (softened/filtered water if required)
- 120 Volt 15 Amp-GFCI
- Main electrical and optional continuous water line to feed from floor to junction box located inside fireplace base.
- All fireplaces factory Flat Black finish
- Custom Client finishes are available by request. Sample required.
- Heat available, most models
- Dedicated wall switch required for operation
- Custom anchor options available

OPTION 1:
Plumbed-In to main source water line, ½" reduced to ¼" factory set connection.

OPTION 2:
Removable 1L container for manual fill approx. 8-10 hour burn time.

Recommended: ¾" drain line to a 1½" floor drain OR condensate pump OR moisture alarm for potential leak management. (Not mandatory)

MAXIM | Suspended Hood with Base Vapor-Fire

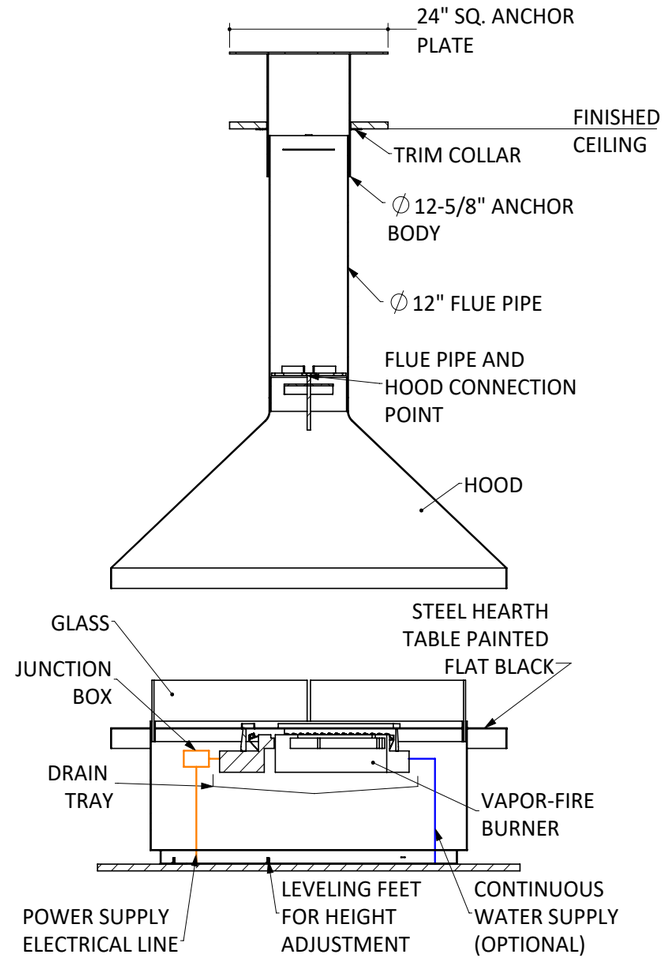

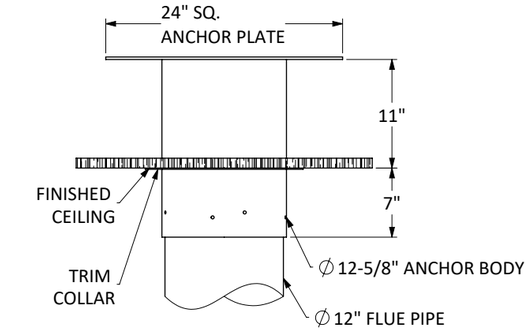

Standard Flat Anchor shown.

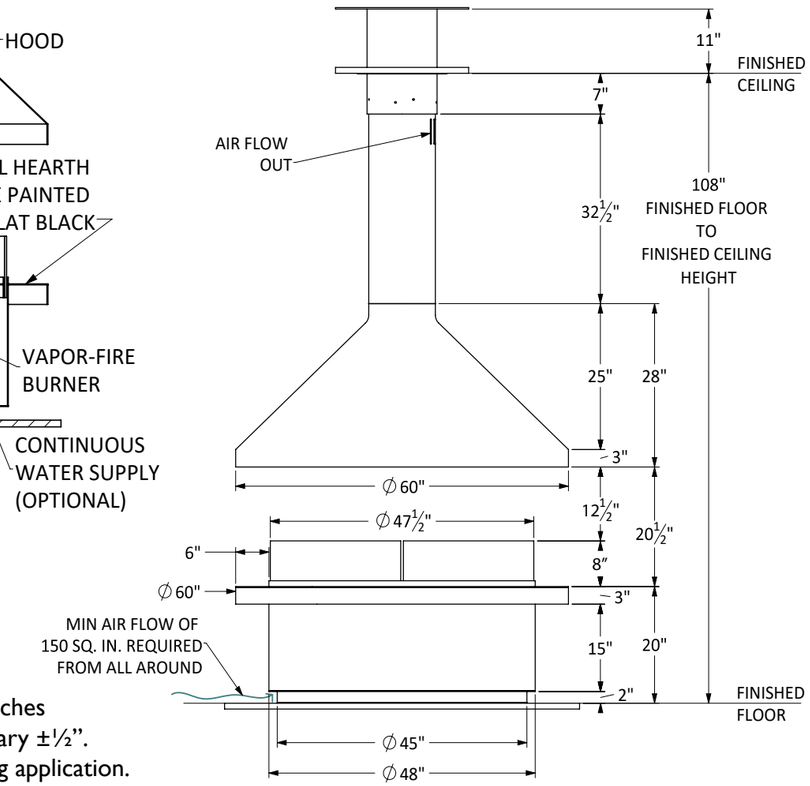

All dimensions are in Inches
Exact measurements may vary ±½".
Shown with standard 9 ft. ceiling application.

Fireplace Base	402 lbs.
Flue Pipe and Hood	190 lbs.
Glass Panels	4

01/2026

Wall-Mount Vapor-Fire

VITA | Fireplaces



Image shown is for illustration purpose and may include some optional features.

- Vapor-Fire burner technology
- Realistic flame without heat
- No chimney venting requirements
- Safe to the touch
- Fueled by regular tap water
  (softened/filtered water if required)
- 120 Volt 15 Amp-GFCI
- All fireplaces factory Flat Black finish
- Custom Client finishes are available by request. Sample required.
- Heat available, most models
- Dedicated wall switch required for operation

OPTION 1:
Plumbed-In to main source water line, ½" reduced to ¼" factory set connection.

OPTION 2:
Removable 1L container for manual fill approx. 8-10 hour burn time.

Recommended: Leak detection sensor for potential leak management.

AIDAN Wall-Mount | Vapor-Fire

All dimensions are in Inches
Exact measurements may vary ±½".
Shown with standard 9 ft. ceiling application.

Mounting Plate	20 lbs.
Fireplace Body	170 lbs.
Flue & Trim Cover	67 lbs.

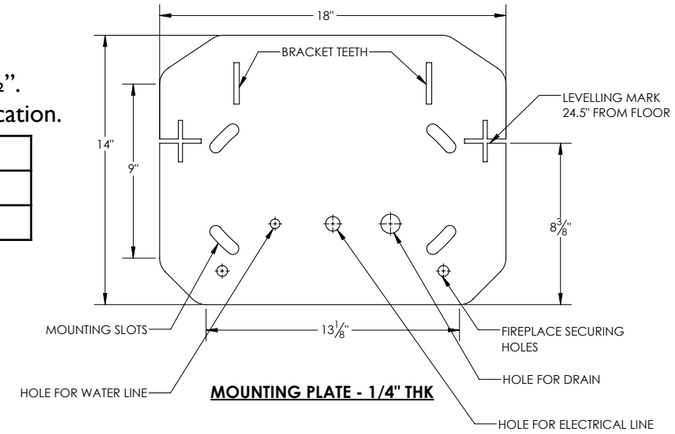

MOUNTING PLATE - 1/4" THK

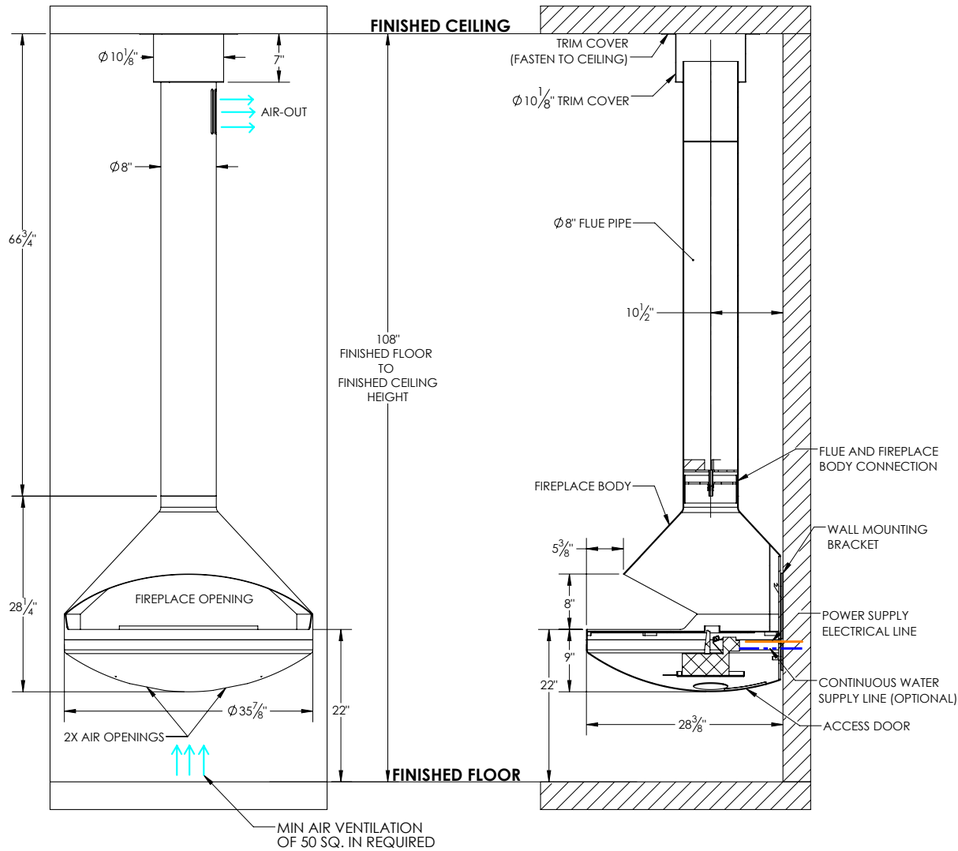

01/2026

VITA | Fireplaces



Image shown is for illustration purpose and may include some optional features.

- Vapor-Fire burner technology
- Realistic flame without heat
- No chimney venting requirements
- Safe to the touch
- Fueled by regular tap water
  (softened/filtered water if required)
- 120 Volt 15 Amp-GFCI
- All fireplaces factory Flat Black finish
- Custom Client finishes are available by request. Sample required.
- Heat available, most models
- Dedicated wall switch required for operation
- Custom anchor options available

OPTION 1:
Plumbed-In to main source water line, ½" reduced to ¼" factory set connection.

OPTION 2:
Removable 1L container for manual fill approx. 8-10 hour burn time.

Recommended: Leak detection sensor for potential leak management.

MONROE | Wall-Mount Vapor-Fire

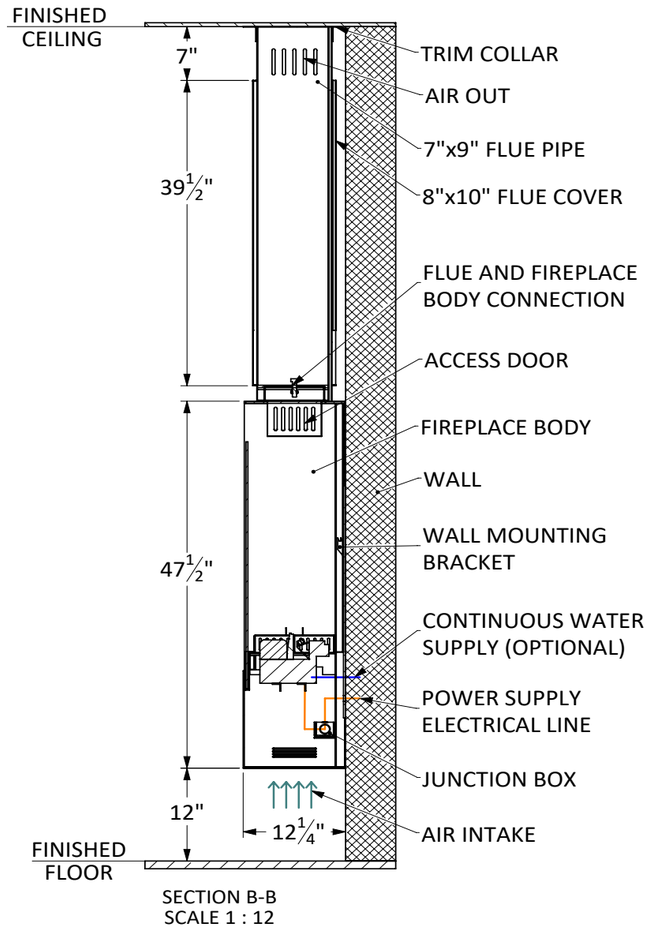

SECTION B-B
SCALE 1 : 12

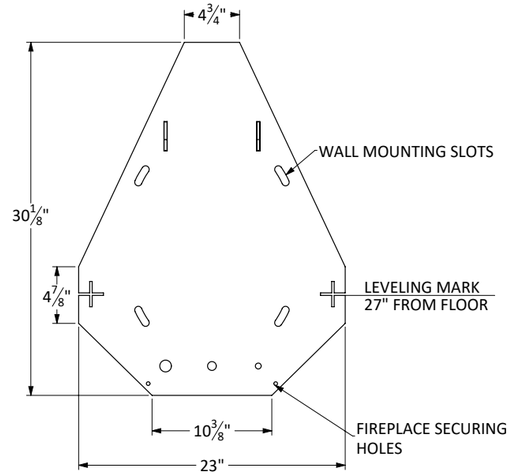

Standard Wall Mounting Plate shown.

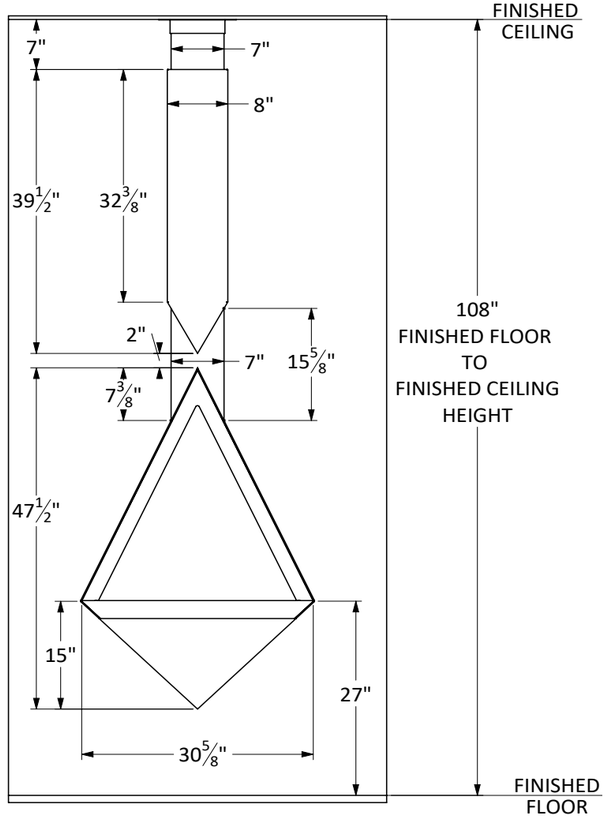

All dimensions are in Inches
Exact measurements may vary ±½".
Shown with standard 9 ft. ceiling application.

Fireplace Body	150 lbs.
Flue Pipe	11 lbs. per foot
Wall Mounting Plate	35 lbs.

01/2026

Built-In Linear Vapor-Fire

VITA | Fireplaces

36” Single-Sided | Built-In Linear Vapor-Fire



Image shown is for illustration purpose and may include some optional features.

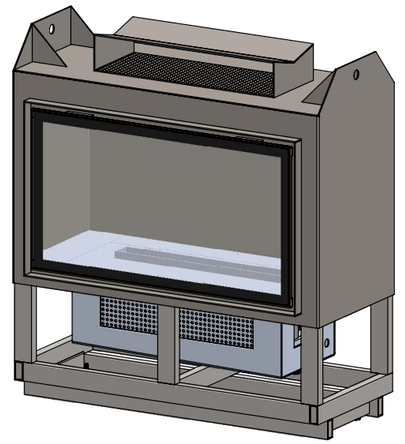

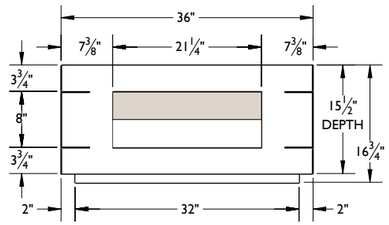

NOTE: DEDICATED WALL SWITCH REQUIRED FOR OPERATION

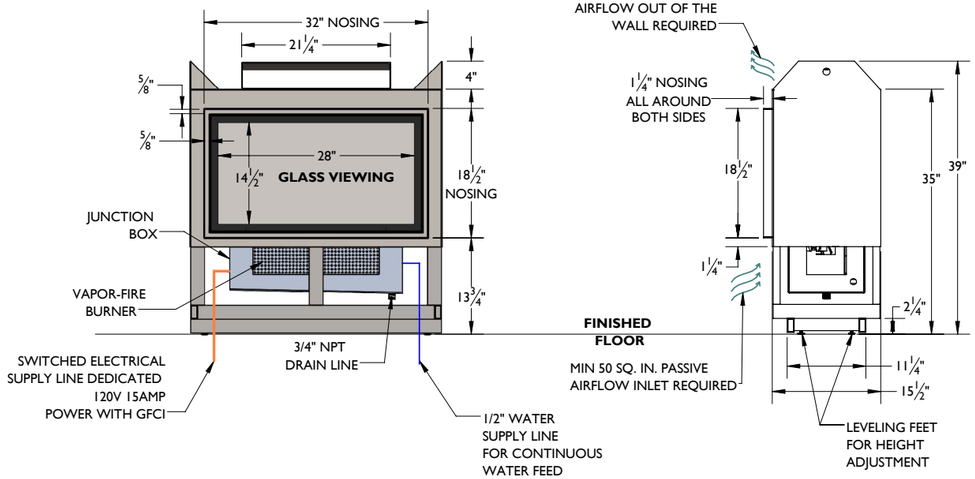

- Vapor-Fire burner technology
- Realistic flame without heat
- No chimney venting requirements
- Safe to the touch
- Fueled by regular tap water (softened/filtered water if required)
- 120 Volt 15 Amp-GFCI
- All fireplaces factory Flat Black finish
- Custom Client finishes are available by request. Sample required.
- Heat available
- Dedicated wall switch required for operation
- 2” framing clearance required for installation

OPTION 1:
Plumbed-In to main source water line, ½” reduced to ¼” factory set connection.

OPTION 2:
Removable 1L container for manual fill approx. 8-10 hour burn time.

Recommended: ¾” drain line to a 1½” floor drain OR condensate pump OR moisture alarm for potential leak management. (Not mandatory)

All dimensions are in Inches
Exact measurements may vary ±½”

Fireplace Weight	230 lbs.
Burner	1 X CDFI500P
Total Burner Length	20” Vapor-Fire Burner
Airflow Requirements	50 Square Inches

01/2026

VITA | Fireplaces



Image shown is for illustration purpose and may include some optional features.

- Vapor-Fire burner technology
- Realistic flame without heat
- No chimney venting requirements
- Safe to the touch
- Fueled by regular tap water (softened/filtered water if required)
- 120 Volt 15 Amp-GFCI
- All fireplaces factory Flat Black finish
- Custom Client finishes are available by request. Sample required.
- Heat available
- Dedicated wall switch required for operation
- 2” framing clearance required for installation

OPTION 1:
Plumbed-In to main source water line, ½” reduced to ¼” factory set connection.

OPTION 2:
Removable 1L container for manual fill approx. 8-10 hour burn time.

Recommended: ¾” drain line to a 1½” floor drain OR condensate pump OR moisture alarm for potential leak management. (Not mandatory)

36” See-Thru | Built-In Linear Vapor-Fire

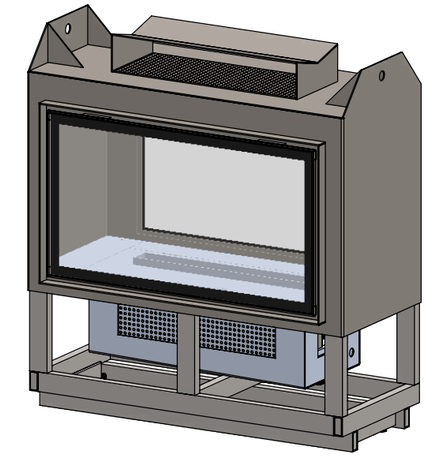

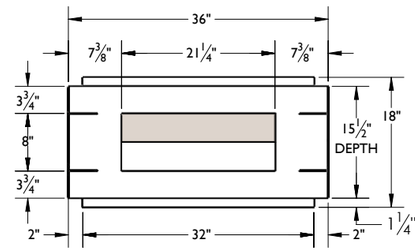

NOTE: DEDICATED WALL SWITCH REQUIRED FOR OPERATION

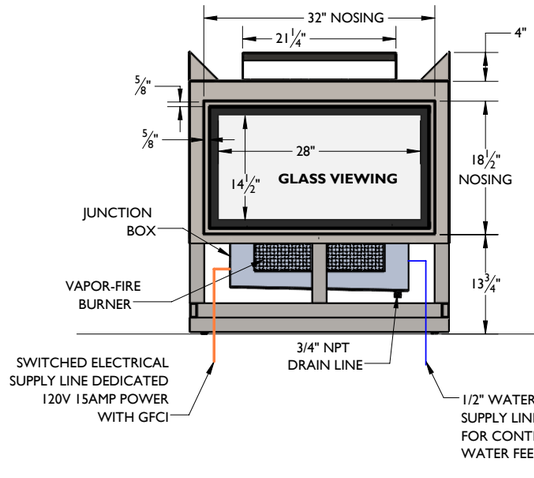

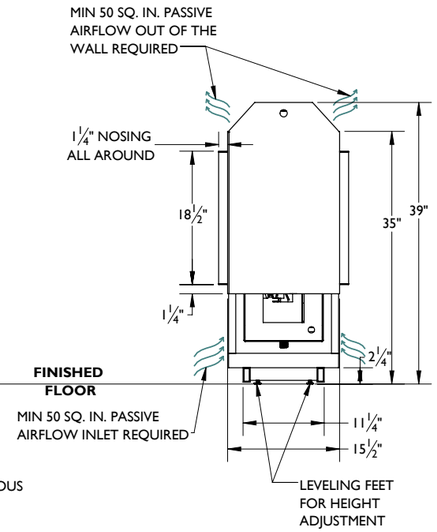

All dimensions are in Inches
Exact measurements may vary ±½”

Fireplace Weight	230 lbs.
Burner	1 X CDFI500P
Total Burner Length	20” Vapor-Fire Burner
Airflow Requirements	50 Square Inches

01/2026

VITA | Fireplaces



Image shown is for illustration purpose and may include some optional features.

- Vapor-Fire burner technology
- Realistic flame without heat
- No chimney venting requirements
- Safe to the touch
- Fueled by regular tap water (softened/filtered water if required)
- 120 Volt 15 Amp-GFCI
- All fireplaces factory Flat Black finish
- Custom Client finishes are available by request. Sample required.
- Heat available
- Dedicated wall switch required for operation
- 2” framing clearance required for installation

OPTION 1:
Plumbed-In to main source water line, ½” reduced to ¼” factory set connection.

OPTION 2:
Removable 1L container for manual fill approx. 8-10 hour burn time.

Recommended: ¾” drain line to a 1½” floor drain OR condensate pump OR moisture alarm for potential leak management. (Not mandatory)

52” Single-Sided | Built-In Linear Vapor-Fire

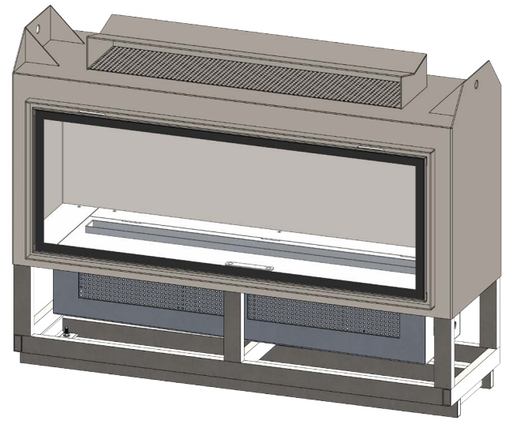

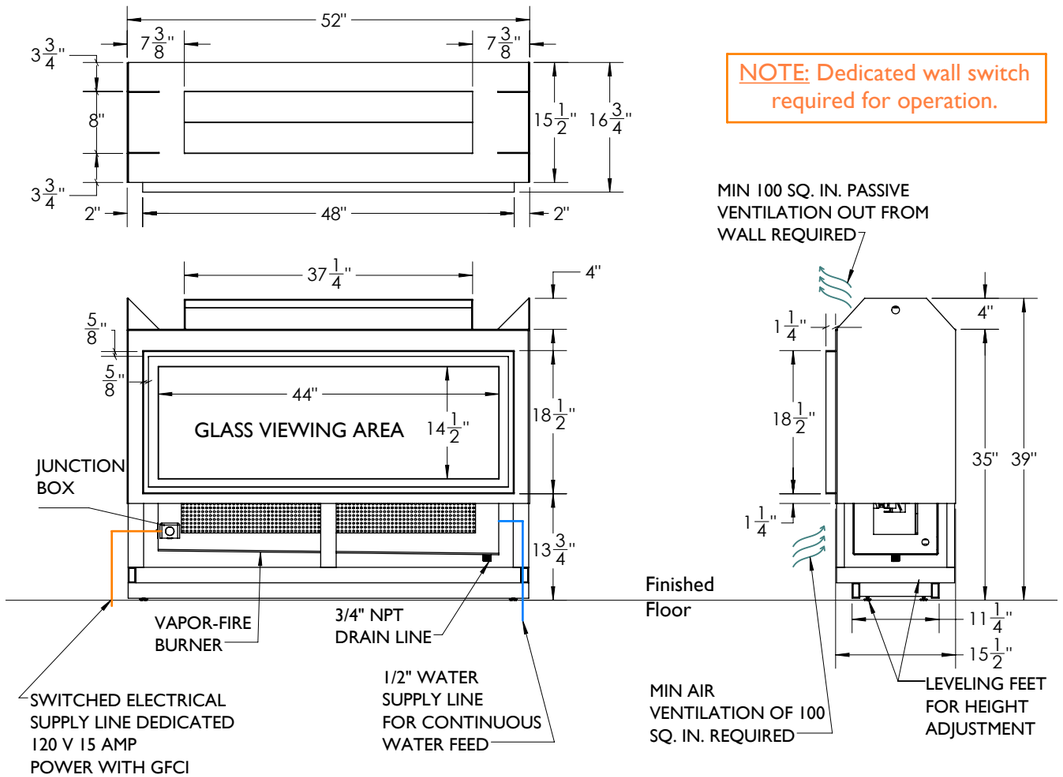

NOTE: Dedicated wall switch required for operation.

All dimensions are in Inches
Exact measurements may vary ±½”

Fireplace Weight	305 lbs.
Burner	2 X CDFI500P
Total Burner Length	40” Vapor-Fire Burner
Airflow Requirements	100 Square Inches

01/2026

VITA | Fireplaces

52” See-Thru | Built-In Linear Vapor-Fire



Image shown is for illustration purpose and may include some optional features.

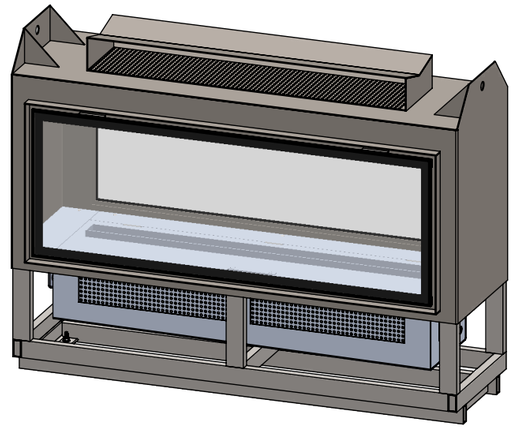

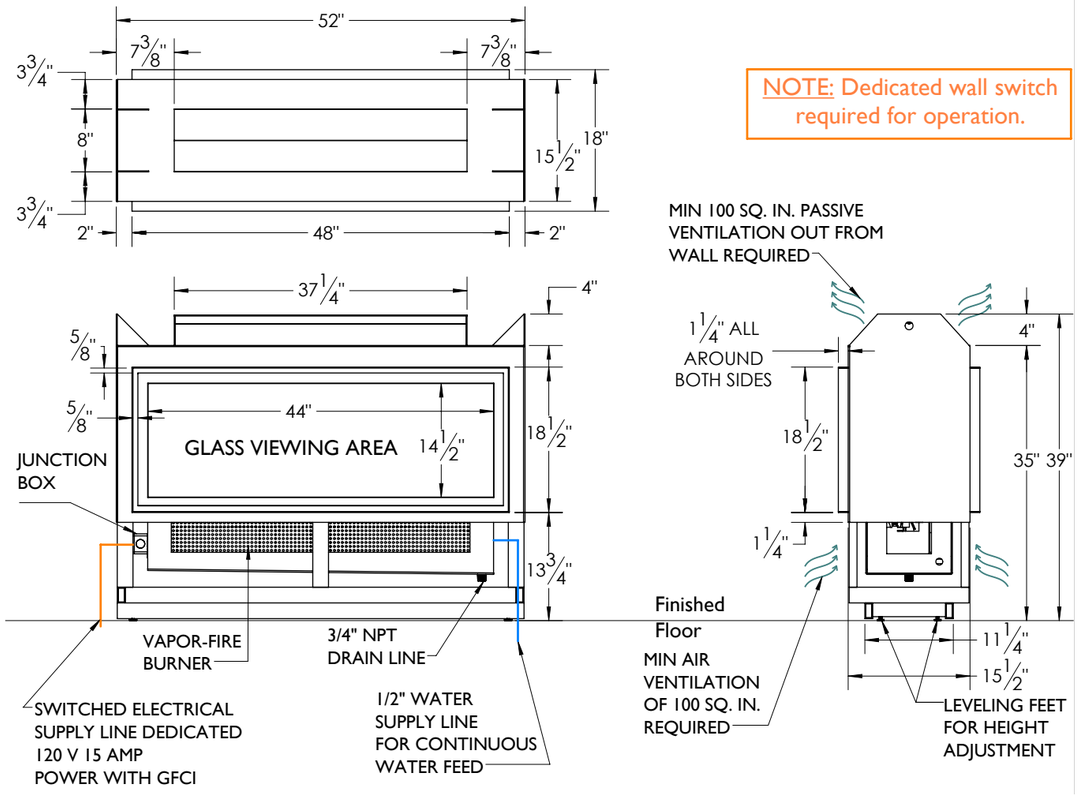

NOTE: Dedicated wall switch required for operation.

- Vapor-Fire burner technology
- Realistic flame without heat
- No chimney venting requirements
- Safe to the touch
- Fueled by regular tap water (softened/filtered water if required)
- 120 Volt 15 Amp-GFCI
- All fireplaces factory Flat Black finish
- Custom Client finishes are available by request. Sample required.
- Heat available
- Dedicated wall switch required for operation
- 2” framing clearance required for installation

OPTION 1:
Plumbed-In to main source water line, ½” reduced to ¼” factory set connection.

OPTION 2:
Removable 1L container for manual fill approx. 8-10 hour burn time.

Recommended: ¾” drain line to a 1½” floor drain OR condensate pump OR moisture alarm for potential leak management. (Not mandatory)

All dimensions are in Inches
Exact measurements may vary ±½”

Fireplace Weight	305 lbs.
Burner	2 X CDFI500P
Total Burner Length	40” Vapor-Fire Burner
Airflow Requirements	100 Square Inches

01/2026

VITA | Fireplaces



Image shown is for illustration purpose and may include some optional features.

- Vapor-Fire burner technology
- Realistic flame without heat
- No chimney venting requirements
- Safe to the touch
- Fueled by regular tap water (softened/filtered water if required)
- 120 Volt 15 Amp-GFCI
- All fireplaces factory Flat Black finish
- Custom Client finishes are available by request. Sample required.
- Heat available
- Dedicated wall switch required for operation
- 2” framing clearance required for installation

OPTION 1:
Plumbed-In to main source water line, ½” reduced to ¼” factory set connection.

OPTION 2:
Removable 1L container for manual fill approx. 8-10 hour burn time.

Recommended: ¾” drain line to a 1½” floor drain OR condensate pump OR moisture alarm for potential leak management. (Not mandatory)

72” Single-Sided | Built-In Linear Vapor-Fire

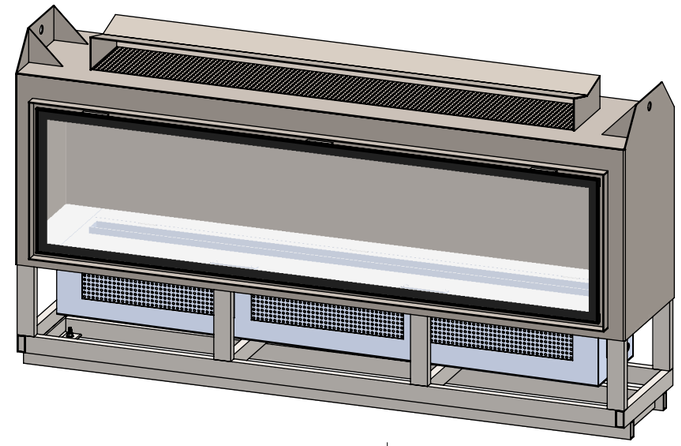

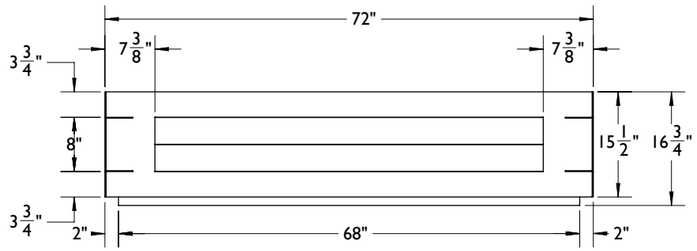

NOTE: Dedicated wall switch required for operation.

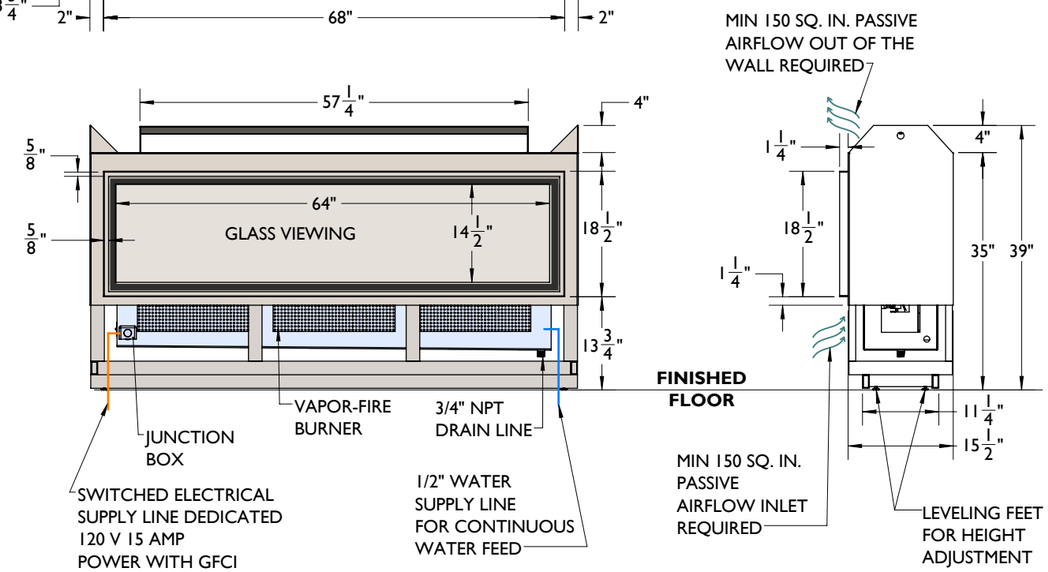

All dimensions are in Inches
Exact measurements may vary ±½”

Fireplace Weight	450 lbs.
Burner	3 X CDFI500P
Total Burner Length	60” Vapor-Fire Burner
Airflow Requirements	150 Square Inches

01/2026

VITA | Fireplaces



Image shown is for illustration purpose and may include some optional features.

- Vapor-Fire burner technology
- Realistic flame without heat
- No chimney venting requirements
- Safe to the touch
- Fueled by regular tap water (softened/filtered water if required)
- 120 Volt 15 Amp-GFCI
- All fireplaces factory Flat Black finish
- Custom Client finishes are available by request. Sample required.
- Heat available
- Dedicated wall switch required for operation
- 2” framing clearance required for installation

OPTION 1:
Plumbed-In to main source water line, ½” reduced to ¼” factory set connection.

OPTION 2:
Removable 1L container for manual fill approx. 8-10 hour burn time.

Recommended: ¾” drain line to a 1½” floor drain OR condensate pump OR moisture alarm for potential leak management. (Not mandatory)

72” See-Thru | Built-In Linear Vapor-Fire

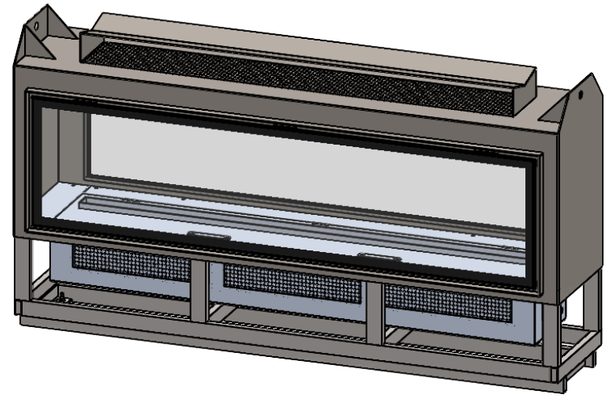

NOTE: Dedicated wall switch required for operation.

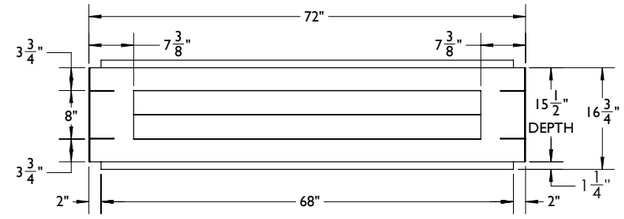

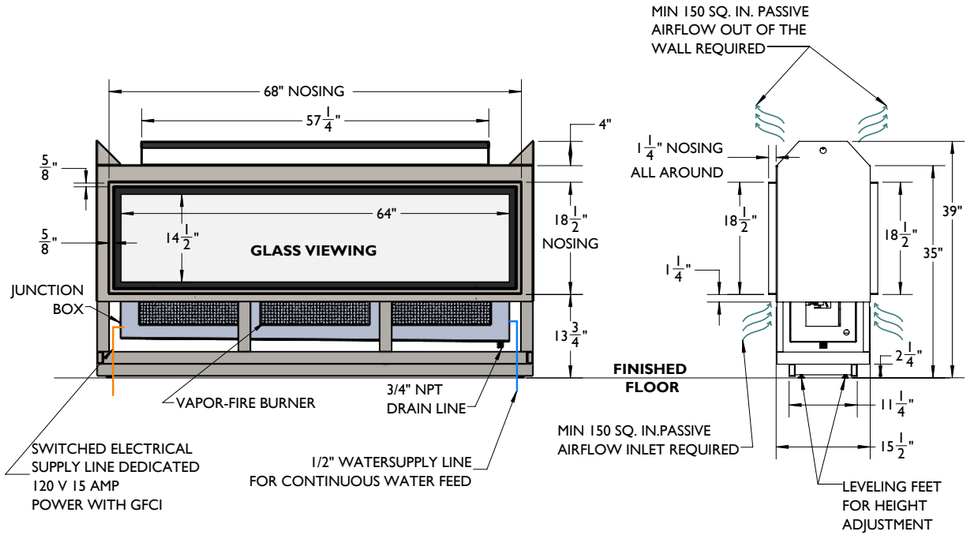

All dimensions are in Inches
Exact measurements may vary ±½”

Fireplace Weight	450 lbs.
Burner	3 X CDFI500P
Total Burner Length	60” Vapor-Fire Burner
Airflow Requirements	150 Square Inches

01/2026

VITA | Fireplaces

96” Single-Sided | Built-In Linear Vapor-Fire



Image shown is for illustration purpose and may include some optional features.

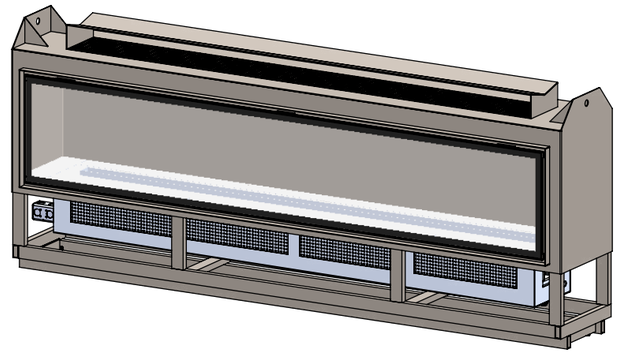

NOTE: DEDICATED WALL SWITCH REQUIRED FOR OPERATION

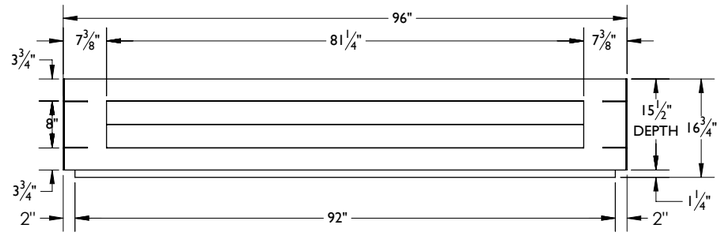

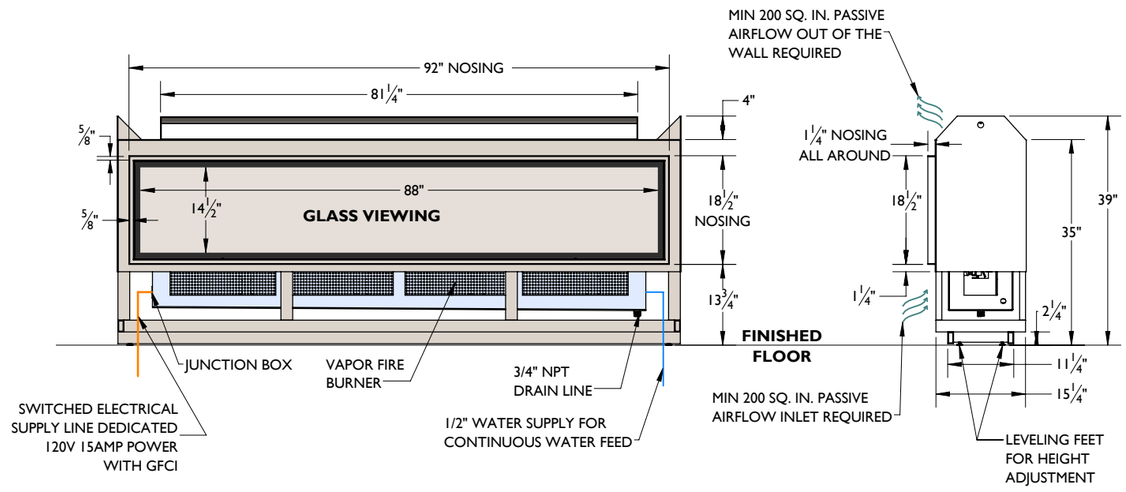

- Vapor-Fire burner technology
- Realistic flame without heat
- No chimney venting requirements
- Safe to the touch
- Fueled by regular tap water (softened/filtered water if required)
- 120 Volt 15 Amp-GFCI
- All fireplaces factory Flat Black finish
- Custom Client finishes are available by request. Sample required.
- Heat available
- Dedicated wall switch required for operation
- 2” framing clearance required for installation

OPTION 1:
Plumbed-In to main source water line, ½” reduced to ¼” factory set connection.

OPTION 2:
Removable 1L container for manual fill approx. 8-10 hour burn time.

Recommended: ¾” drain line to a 1½” floor drain OR condensate pump OR moisture alarm for potential leak management. (Not mandatory)

All dimensions are in Inches
Exact measurements may vary ±½”

Fireplace Weight	600 lbs.
Burner	4 X CDFI500P
Total Burner Length	80” Vapor-Fire Burner
Airflow Requirements	200 Square Inches

01/2026

VITA | Fireplaces

96” See-Thru | Built-In Linear Vapor-Fire



Image shown is for illustration purpose and may include some optional features.

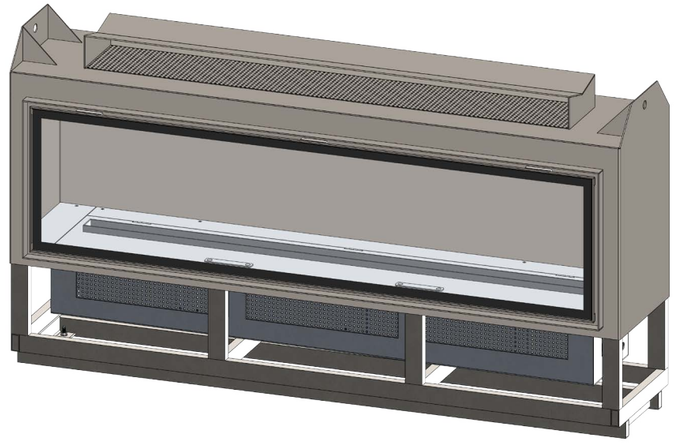

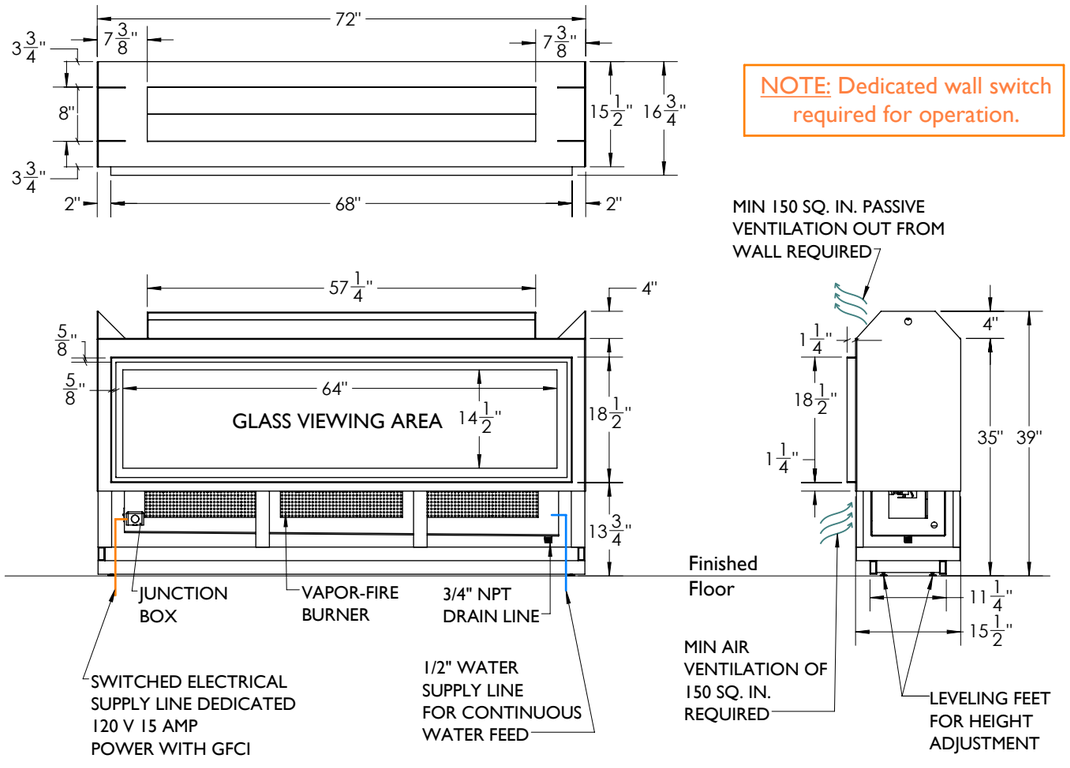

- Vapor-Fire burner technology
- Realistic flame without heat
- No chimney venting requirements
- Safe to the touch
- Fueled by regular tap water (softened/filtered water if required)
- 120 Volt 15 Amp-GFCI
- All fireplaces factory Flat Black finish
- Custom Client finishes are available by request. Sample required.
- Heat available
- Dedicated wall switch required for operation
- 2” framing clearance required for installation

OPTION 1:
Plumbed-In to main source water line, ½” reduced to ¼” factory set connection.

OPTION 2:
Removable 1L container for manual fill approx. 8-10 hour burn time.

Recommended: ¾” drain line to a 1½” floor drain OR condensate pump OR moisture alarm for potential leak management. (Not mandatory)

All dimensions are in Inches
Exact measurements may vary ±½”

Fireplace Weight	600 lbs.
Burner	4 X CDFI500P
Total Burner Length	80” Vapor-Fire Burner
Airflow Requirements	200 Square Inches

01/2026

VITA Fireplaces Vapor-Fire Collection

North American Designed and Manufactured by
CF + D | custom fireplace design

VITA Fireplaces models are available in exclusive Single-Sided, See-Thru, Double-Sided and Triple-Sided views allowing the flame to be viewed from all angles. Built-In Linear models are designed to be framed into the wall, becoming part of the integral wall structure, leaving an opening for the glass/flame viewing area. The Monroe Wall-Mount Vapor-Fire includes a standard wall-mounting plate for securing the fire-feature to the wall.

Each unique model can be built to incorporate the Vapor-Fire burner technology system using water as a fuel source. Suspended models can also be built (and are certified) to be fueled by natural gas or propane. With the fuel options available and the variety of styles we have created, our clients now have an alternative fire-feature to fit into many projects whether residential, commercial or the hospitality sector.

Included with the purchase of a VITA Fireplaces Vapor-Fire model are the following:

Vapor-Fire Burner Technology
Manual Fill Option for 8 - 10 hour burn time, or Plumbed-In Option for continuous burn time.
All Models.

Flue Length for Standard 9 ft. Ceiling *(Suspended Models Only)*

Standard Flat Anchor *(Suspended Models Only)*

Standard Factory Flat Black Paint Finish
All Models.

Client's Choice of One Décor Media Option
All Models.

There are a number of premium décor media option choices displayed in this booklet.
We hope this is helpful in making your selection to personalize your unique fireplace choice.

Please contact us to begin your next project.

Our creative design solutions are waiting!

**Some options outside of standard inclusions are available at an additional cost.*

Décor Media and Finishes


Midnight Black Rocks


White Marble Rocks


Sherlock Grey Rocks


Black Crushed Glass


White Crushed Glass


Gold Crushed Glass


Canoe Birch Twigs*


Central Park Twigs*


Riverbed Twigs*


*Lava granules included with all Twig sets.


Factory Flat Black

ALL STANDARD PRICED MODELS
PAINT FINISHED IN FACTORY
FLAT BLACK

CUSTOM GLOSS PAINT FINISH


RAL 9017 Traffic Black


RAL 3001 Signal Red

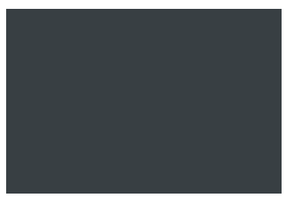
RAL 7012 Basalt Grey

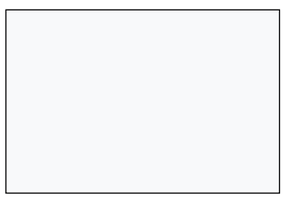
RAL9016 Traffic White

CUSTOM FINISHES
Custom client-specified finishes are available by request (a sample must be provided).

CF + D | custom fireplace design

5230 Harvester Rd. Unit # 2, Burlington, ON, L7L 4X4

1.866.909.3070

www.customfireplacedesign.com