VITA | Fireplaces

Fireplaces have been tested and proved to comply with: ANSI Z21.50/CSA 2.22 Vented Gas Fireplace. Certified under: ICC-ES PMG-1290

- Natural Gas or Propane fueled.
- Natural Gas Burner: approx. 75,000 BTUs.
- Propane Burner: approx. 60,000 BTUs.
- 120 Volt 15 Amp required for venting.
- Gas & Electrical connection to be completed on-site at service door.
- 6" ID B-Vent chimney system required.
- All standard fireplaces painted in factory matte black finish. Custom paint colors and patina finishes available.
- Switch operation on wall (not included).
- All dimensions are in inches.
- Exact measurements may vary ± ¼".
- Optional decorative chimney cover available at add'l cost.
- Custom anchor options available at add'l cost.
- Enervex Intelli Draft and Damper System.
- Optional Inline Fan with flush terminal available. Inquire for details.
- Fasten/Secure hearth to the floor.
- Minimum 50 sq. in. of ventilation air required for cooling controls.
- 2 x 1-1/2" conduit's recommended on floor for Gas & Electrical requirements.

MAXIM | Suspended Hood with Base Gas Fireplace (Horizontal Termination)

Standard 9ft. Ceiling Application approx. weights	
Flat Anchor	100 lbs.
Flue Pipe & Hood	190 lbs.
Fireplace Body	390 lbs.
Total Standard Fireplace	680 lbs.

CLEARANCE TO COMBUSTIBLES

- 12" from hood & fireplace body. 1" where the anchor or flue crosses the Ceiling & Roof.
- 1" where the chimney system terminates at wall outlet.
- A minimum 12" distance between a combustible wall and fireplace body is required.
- Non combustible floor material required under the fireplace.

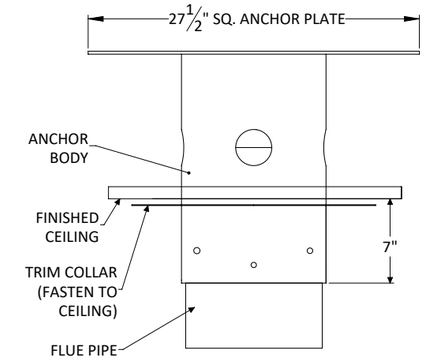

STANDARD FLAT ANCHOR

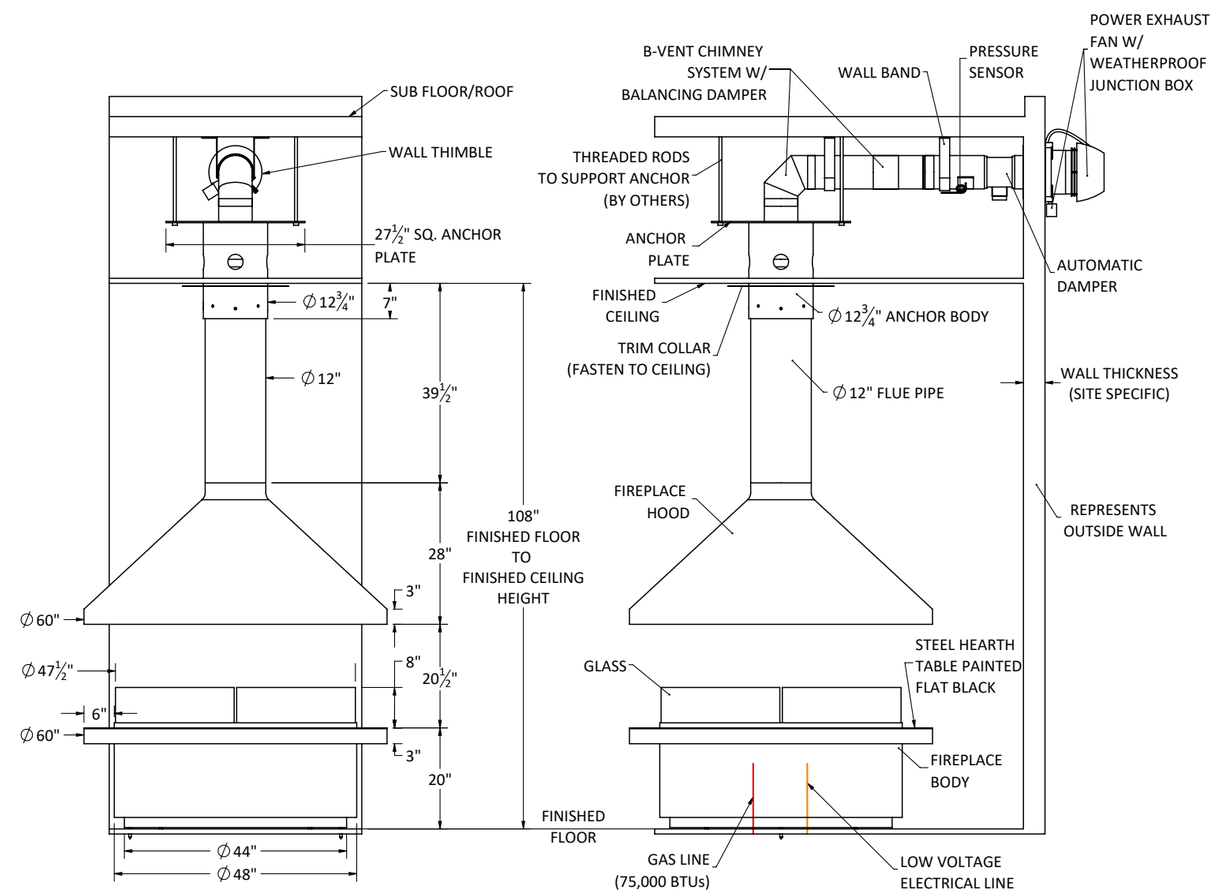

Shown with standard 9 ft. ceiling application and flat anchor option.

6/23/20