VITA | Fireplaces

North American Designed & Manufactured by CF + D | custom fireplace design

IMPORTANT : THIS APPLIANCE IS INTENDED TO BE OPERATED BY A WALL SWITCH, THE TETHERED CONTROLLER ATTACHED TO THE BURNER IS FACTORY-SET AND SHOULD NOT BE ALTERED.

AIDAN | See-Thru

Suspended Fireplace with Vapor-Fire Burner

INSTALLATION | OWNER'S MANUAL

Serial #

Read complete manual before installing and feel free to reach out to discuss best practices (1-866-909-3070). Keep manual for future reference.

CF + D | custom fireplace design

www.customfireplacedesign.com

REV 3 - April 2025

Table of Contents

VITA | Fireplaces Installation Manual

A letter from our President....3

Important Instructions....5

General Information....6

Fireplace Specifications....7

Installation Breakdown....8

a) Installation Requirements

b) Required Tools

Anchor Assembly Installation....9

Anchor Options Diagram....10

Trim Collar Installation....11

Flue Pipe Installation....12

Flue Pipe Extension Installation....13

Flue Stabilizer Brace Installation....14 & 15

Fireplace Body Installation....16

Electrical Diagram Without Heater Model....17

Electrical Diagram With Heater Model....18

Heater Connection Installation....19

Electrical Installation....20

Burner Plate Instructions....20

Tethered Controller Instructions....21

Plumbed-In System....22 & 23

Manual Fill System....23 & 24

Warranty Statement....25

Commissioning Assistance....26

Vapor-Fire Burner Service Manual....Page No. 27 - 48

A Letter from Our President

CF + D | custom fireplace design

QUALITY | CREATIVITY | INNOVATION

Our entire team joins me in thanking you for purchasing the AIDAN See-Thru Suspended Vapor-Fire model, part of our exclusive line of VITA Fireplaces, designed and manufactured by CF + D | custom fireplace design. We are proud of our quality workmanship, our creativity in designing functional art pieces and our commitment to technical innovation. We welcome the challenges that come across our designers' desks, keeping our creative minds working on developing new ideas with our clients to build their dream fire feature.

Upon receiving this letter, your VITA Fireplace has now been shipped and received. The installation, technical and service manuals are included in the package and our Technical Team is available with assistance throughout the installation and start-up of your new VITA Fireplace.

The Management, Designers and our Metal Craftsman, thank you again for the opportunity of being a part of your project. We value our clients greatly and are available for consultation before, during and after the installation of your exclusive VITA Fireplace.

Vince Volpe
President and CEO
CF + D | custom fireplace design

CF + D | custom fireplace design
5230 Harvester Rd. Unit #2 Burlington, Ontario Canada
L7L 4X4 t. 1-866-909-3070 t. 905-681-3070
www.customfireplacedesign.com

VITA | Fireplaces

Installation Manual

Important Instructions

IMPORTANT: Read all instructions before installation.

1. NOT suitable for operation with Natural Gas or L.P./ Propane.
2. DO NOT insert or allow foreign objects to enter any ventilation or exhaust opening as this may cause electric shock.

Electric shock risk

3. DO NOT block air intakes or exhaust in any manner.
4. DO NOT use in area where gasoline, paint or flammable liquids are used or stored.
5. DO NOT burn wood or other materials in this model.
6. Always **USE A CERTIFIED ELECTRICIAN** should new circuits or outlets be required.
7. DISCONNECT THE POWER SUPPLY BEFORE DOING ANY CLEANING, MAINTENANCE OR RELOCATION OF THE MODEL.

8. To disconnect the model, turn the controls off and disconnect the power at the service panel.

A dedicated 15 Amp, 120V GFCI is required for electrical supply.

Vapor-Fire Burner:

This equipment has been tested and found to comply with the limits for Class B digital device, pursuant to part 15 of the FCC Rules. These limits are designed to provide reasonable protection against harmful interference.

Construction and electrical outlet wiring must comply with local building codes and other applicable regulations to reduce the risk of fire, electric shock and injury.

9. Tethered Bluetooth control boxes are connected before shipping to ensure proper operation. They are also used to sync the remote control for remote operated units. Make sure they are all firmly plugged in for the unit to work properly. They may have become loose during shipping.

DO NOT REMOVE OR DISCONNECT THE TETHERED BLUETOOTH DEVICE FROM INSIDE THE UNIT. It has been factory set to ensure proper operation and must remain tucked within the back of the unit.

<u>NOTE:</u> Electrical dedicated switch operation recommended for all applications.
Remote controls are available upon request.

General Information

KEEP THIS MANUAL HANDY FOR EASY REFERENCE.
ALL WARNINGS & CAUTIONS SHOULD BE STRICTLY OBSERVED.

Please read this entire manual before you install and use your VITA Fireplaces Vapor-Fire Feature.

Failure to follow the instructions may result in property damage, bodily injury or even death.

When this fire feature is not properly installed, a fire may result. To reduce the risk of fire, follow the installation instructions.

This service bulletin is to serve as a guide to the installation and operation of your fireplace system. It is not intended to replace skilled trades and/or expertise that may be required to perform installations.

All electrical and electronic components must be installed, inspected and tested by qualified persons in accordance with local building codes. All standard safety practices as indicated by local codes, laws, or OSHA standards must be followed to prevent accident or injury.

Some of the components supplied cannot be installed by a single person nor should they be installed from a ladder.

All site safety arrangements are the responsibility of the Site Supervisor, General Contractor and/or Fireplace Installers, and not CF + D.

USING MAKE-SHIFT COMPROMISES DURING INSTALLATION CAN CAUSE DAMAGE. Such installations are not covered under CF + D limited warranty.

DO NOT CONNECT TO ANY AIR DISTRIBUTION DUCT OR SYSTEM!

CF + D specializes in creating one of a kind, hand-made artistic fireplaces. While these fire features are generally developed for their aesthetic presence, they are also a functional appliance. As such, natural variations in the material forming processes and patina are part of the sculptural spirit of the fireplace, adding to the beauty and uniqueness of the design.

PRODUCT INFORMATION

- Vapor-Fire burner technology
- Realistic flame without heat
- No chimney venting requirements
- Safe to the touch
- Fueled by regular tap water (softened/filtered water if required)
- 120 Volt, 15 Amp-GFCI for Vapor Burners
- All fireplaces come in flat black finish
- Custom colors and patina finishes available
- Heat available

WATER SOURCE OPTIONS

OPTION 1 : Plumbed-In to main source water line, ½" reduced to ¼" factory set connection.

OPTION 2 : Removable 1L container for manual fill with approx. 8-10 hour burn time.

Recommended : Condensate pump OR moisture alarm for potential leak management. (Not mandatory).

NOTE : Exact measurements may vary ±½".

AIDAN | SEE-THRU
SAMPLE LAYOUT

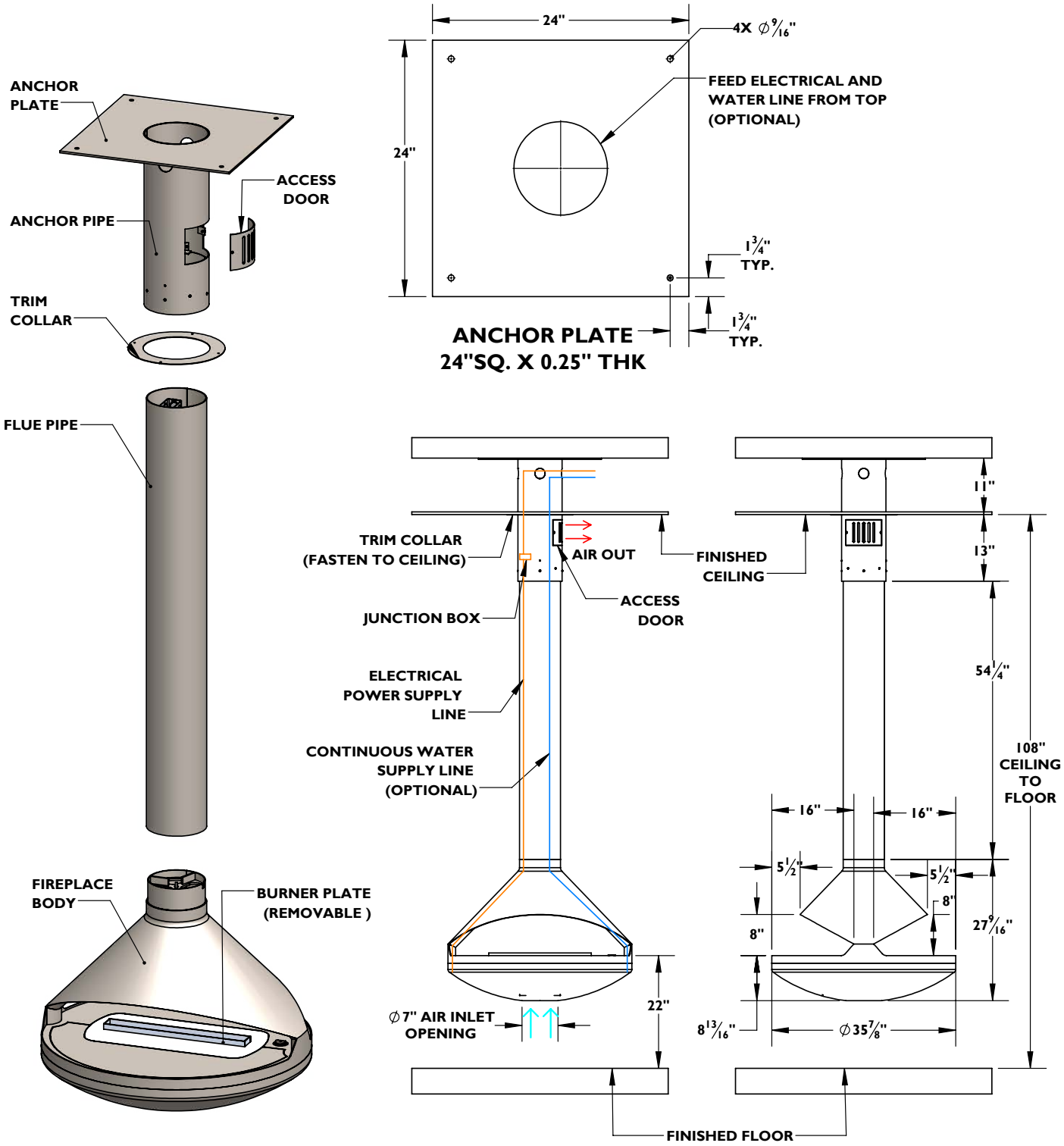

Shown with Standard 9ft. Flat Ceiling Application
Custom Lengths and Anchor Options Available

INSTALLATION | OWNER'S MANUAL

AIDAN | See-Thru Suspended Fireplace with Vapor-Fire Burner

A) Installation Requirements

- Prepare ceiling for the installation of the anchor plate (see Anchor Plate Options Page 10).
- **Complete prior to install :** Provide electrical 15 AMP Service 120V GFCI at the ceiling ready for anchor plate placement and the supplied wiring and junction box connections (See Page 20).
- If the client has chosen the option of continuous water, a plumbed-in ½" water line for continuous water flow from the ceiling is required and **must be prepared before unit is installed.** This will connect to the ¼" plumbing line supplied with the fireplace. The water shut off is located at the plumbing connection. (See Instructions Pages 22-23).
- For manual fill operation, two water containers will be supplied with the unit for manual refilling (See instructions Page 23-24).
- **NOTE:** Cold water is required.
- **WATER HARDNESS:** Confirm local water supply is in the slight to moderate zone being 1.0 - 7.0gpg or between 17 - 120ppm for optimum performance. Hardness levels above this amount could negatively impact performance and lead to more frequent maintenance requirements.

B) Required tools

- Drill
- M8 Allen key
- Level
- Screw drivers
- M12 Allen key
- Scaffolding if necessary
- 2 persons minimum are required for installation.

CAUTION

TWO OR MORE PEOPLE OR A LIFTING DEVICE REQUIRED TO LIFT THIS ITEM

C) Description

Fireplace Body Weight	See-Thru ~155 lbs.
Fireplace Body Diameter	~36"
Flue Diameter	~8"
Flue Length	Made to specification
Flue Weight	~11 lbs. per foot

Anchor Assembly Installation

The first step is to install the anchor assembly. The anchor assembly will hold the weight of the fireplace and suspend it from the ceiling or roof. A supported opening in the roof or ceiling to accommodate the anchor plate will be required. Adequate and approved structural methods must be used when mounting the anchor for it to carry its designated load.

Before starting, verify the location of the fireplace body and the point at which the anchor assembly will be positioned. Lift the anchor assembly into position to place it in the prepared supported ceiling or roof. Place the anchor in the desired location and mount it to the ceiling using ½" fasteners (not provided). Fasteners must be mounted into studs or a solid substrate (See Figure 1). (Fastening means to be determined and supplied by others). Depending on your application, refer to your specific layout drawing for custom anchor assembly installation (See Anchor Assembly Options Diagram on Page 10).

CAUTION! THE SUPPORT OF THE ANCHOR PLATE (ROOF STRUCTURE, SLAB, ETC.) MUST BE SIZED IN ACCORDANCE WITH THE STATIC AND DYNAMIC LOADS OF THE FIREPLACE. THE SIZE CALCULATION FOR THE SUPPORT IS NOT THE RESPONSIBILITY OF CF + D OR ITS AFFILIATES. IT IS YOUR RESPONSIBILITY TO CONSULT WITH AN ENGINEER OR ARCHITECT FOR YOUR PROJECT.

After securing the anchor assembly in its position, utilize the four holes on the anchor pipe to feed in the electrical and gas supply connections. Ensure that these supply connections remain accessible from the access door for the flue pipe installation step.

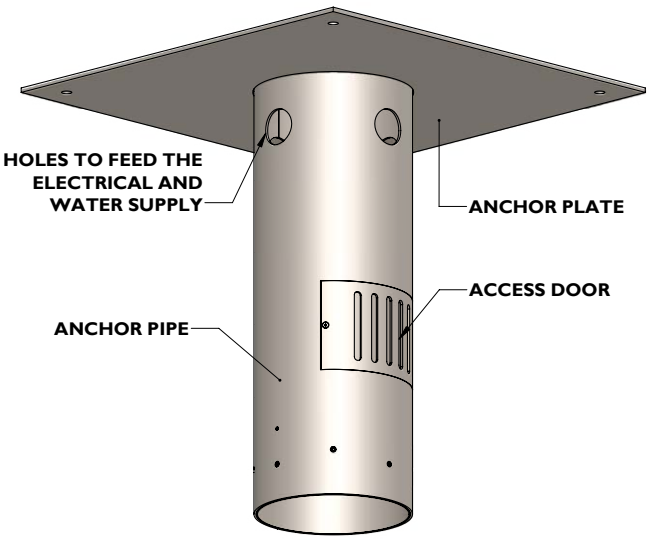

Figure 1

CAUTION: Use multiple people or a portable crane to move the fireplace into position.

Anchor Options - Diagram

NOTE : FASTENING MEANS TO INSTALL ANCHOR ASSEMBLY TO THE STRUCTURE IS TO BE DETERMINED AND SUPPLIED BY OTHERS.

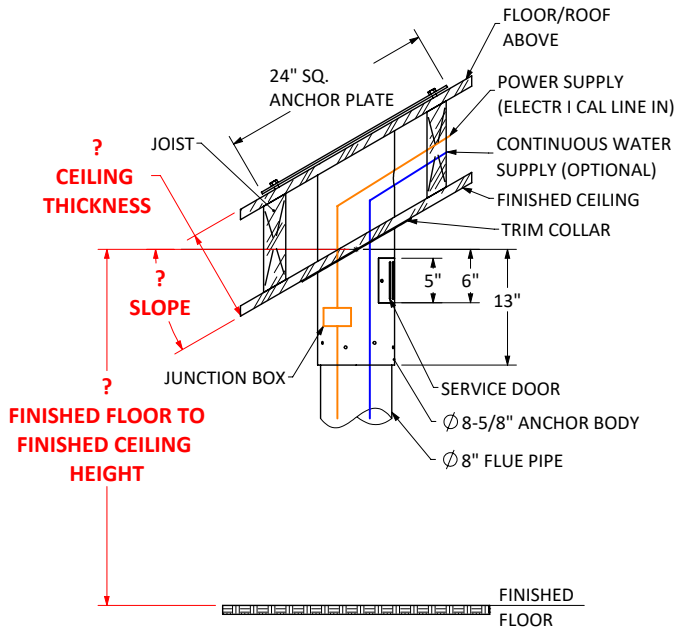

OPTION A - SLOPED DROP FROM ABOVE

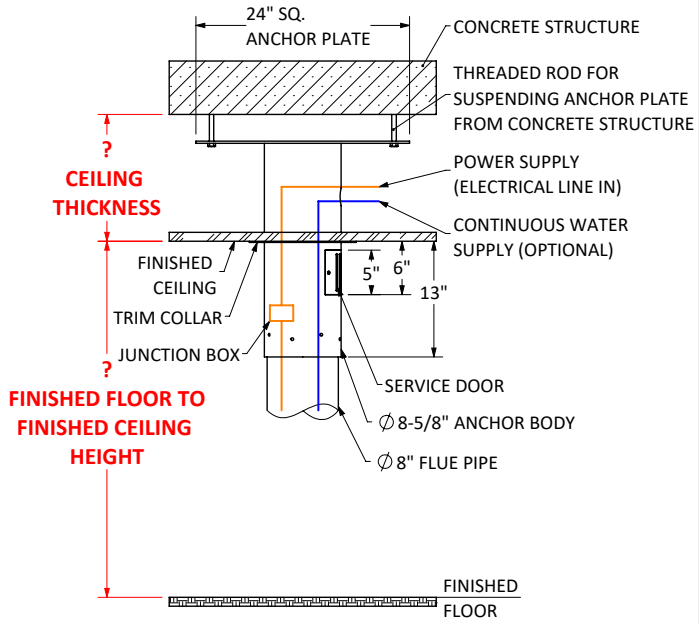

OPTION B - SUSPENDED FROM CONCRETE

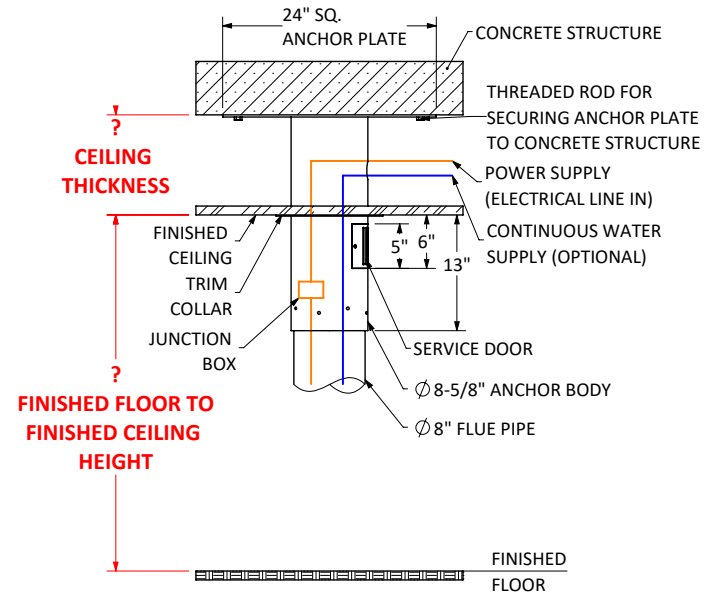

OPTION C - ATTACHED BELOW CONCRETE

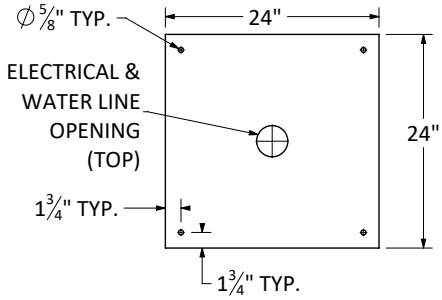

ANCHOR PLATE
24" SQ. x 0.25" THK.

Trim Collar Installation

Fit the trim collar around the anchor pipe and slide it upward to meet the finished ceiling. Affix the trim collar to the finished ceiling using either 4 screws (not provided) or other means of attachment, depending on your requirements.

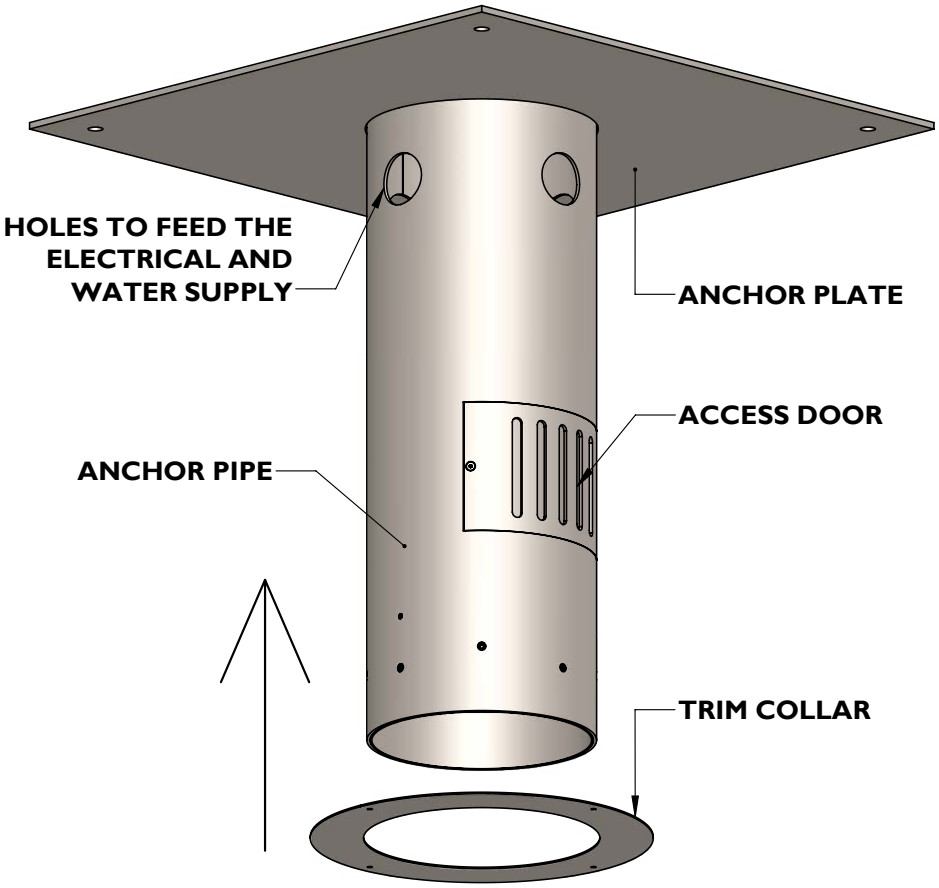

Figure 2

NOTE :

INSTALL THE TRIM COLLAR BEFORE INSTALLING THE FLUE PIPE, FLUE STABILIZER (IF APPLICABLE), AND FIREPLACE BODY.

Flue Pipe Installation

NOTE: If your application requires multiple flue sections, ensure the shorter piece is installed into the anchor.

To install the flue pipe, raise the pipe up to meet the anchor assembly that has now been positioned. The flue pipe is designed to fit directly into the anchor pipe (See Figure 3). The flue pipe will also have the junction box attached for connection once it is inserted into the anchor and accessible through the access door on the anchor pipe.

NOTE: There are alignment marks on the flue and the body, right at the seam on the rear. Align these marks when installing the fireplace body to the flue at what would be considered the rear of the application.

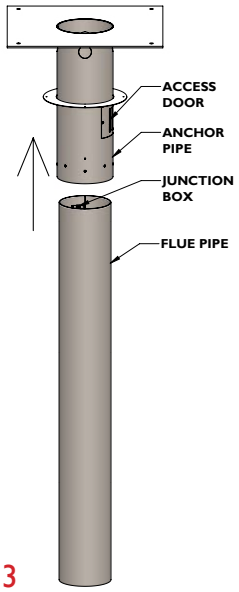

Figure 3

There are 8 pointed load-bearing set screws installed into the anchor body, and the package includes 2 stainless roll/split pins. The 8 set screws are staggered in position. Begin by loosening each set screw in the anchor body to maximize the space for the flue pipe to enter the anchor. Raise the flue into the anchor body until it reaches a full stop just before it reaches the access door (approximately 6 inches).

To ensure that the flue pipe is hanging plumb (straight) and level, use a 5/32" Allen key to tighten one screw until you feel resistance, then tighten the screw directly opposite on the other side of the flue until resistance is felt, and continue. When all 8 screws are half tightened, check the position of the flue and continue adjusting until the flue pipe is perfectly plumb and level.

Once the flue is in the perfect position, completely tighten each of the 8 set screws to firmly secure the flue pipe into the anchor. Locate the two 3/16" pilot holes directly opposite each other in the anchor body.

Using a drill, pass a 3/16" drill bit through each pilot hole and through the flue. Hammer a roll/split pin (provided) through each hole until it's flush, which will permanently lock the flue pipe to the anchor (See Figure 4).

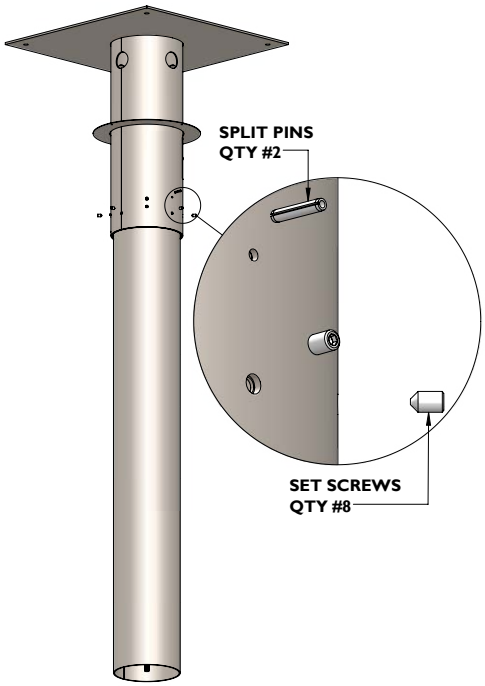

Figure 4

Install the Flue Pipe Extension (If Applicable)

Option 1:
Flue Pipe Extension with Twist & Lock

NOTE :The stabilizing brace is applicable when the distance between the finished floor and finished ceiling is 15 feet or more. Refer to the instructions on page 14 or 15 before proceeding.

A ½" round rod is welded into the bottom of the flue extension (See Figure 5). The top of the long flue pipe has laser-cutouts to accommodate the rod in the flue extension. You can now raise the long flue pipe with the male collar that has the laser-cutouts into the flue extension pipe. Once raised, twist to pull the lower section up and secure it in place.

Then, insert a 3/16" roll/split pin into the holes on each side of the flue pipe to lock it in place. The flue pipe extension is now connected (See Figure 5.1).

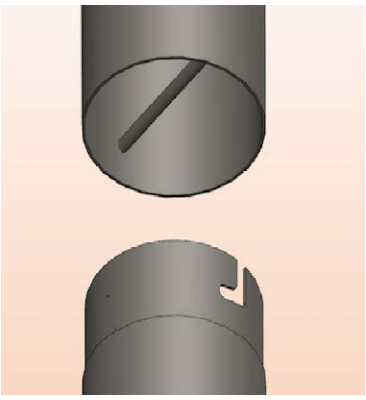

Figure 5

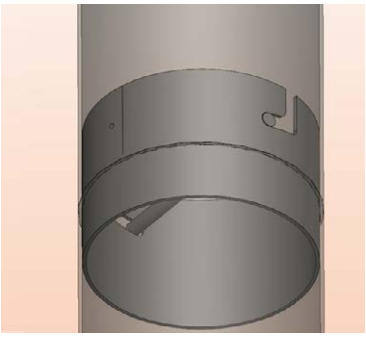

Figure 5.1

Option 2:
Flue Pipe Extension with Mechanical Screws

Position the provided flue pipe extension with the pre-welded male collar facing up. Insert the male collar into the main flue pipe, ensuring that the pre-drilled holes line up (See Figure 6). Secure both flue sections together using the flat socket cap screws provided (See Figure 6.1).

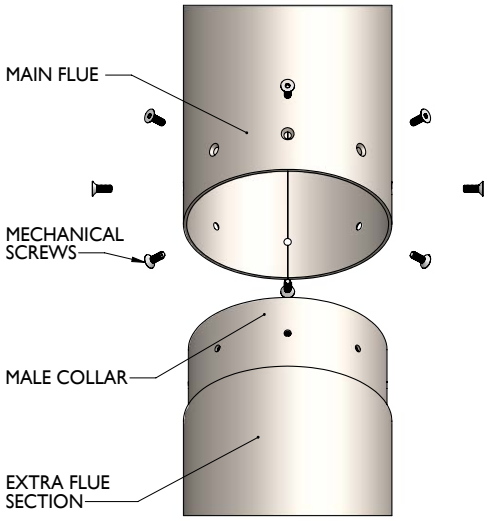

Figure 6

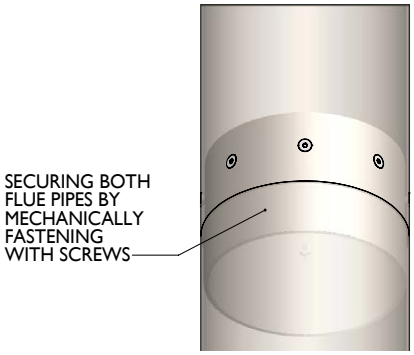

Figure 6.1

Install the Stabilizer Brace (If Applicable)

NOTE :

- **The custom stabilizer brace is required when the finished floor to ceiling height is equal to or greater than 15 feet.**
- **The ideal place to install the stabilizer brace is where flue pipe-1 and flue pipe-2 connect together (FINAL LOCATION TO BE DETERMINED BY OTHERS).**
- **Provided image is for illustration only. Actual product may vary.**

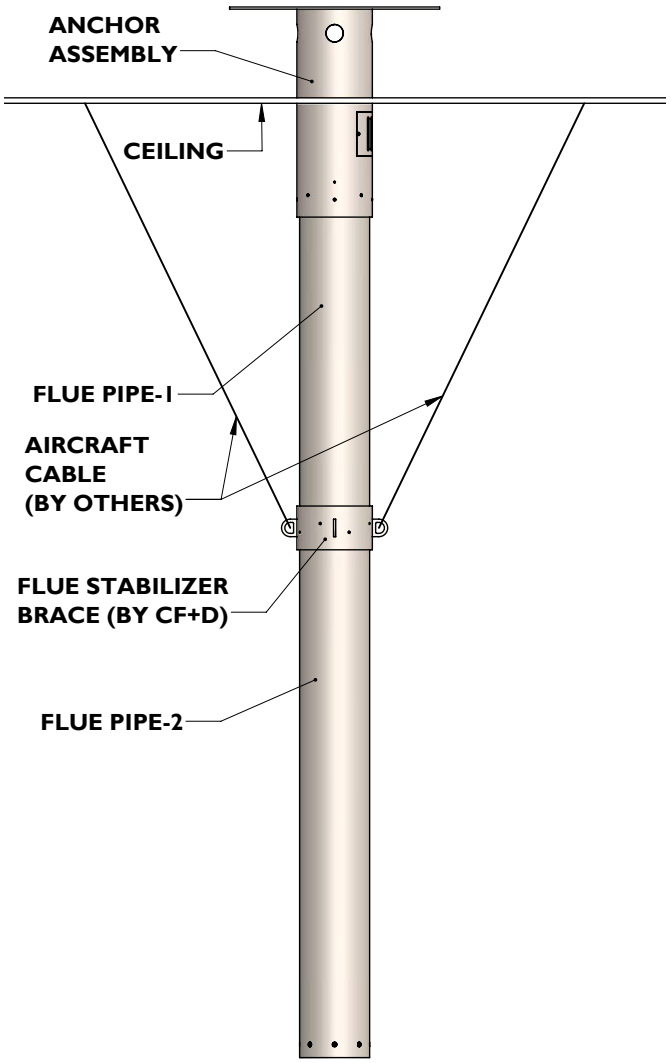

Figure 7

Once flue pipe-2 is installed, slide the stabilizer brace from the bottom up to the joint between flue pipe-1 and flue pipe-2, as shown in Figure 7. Secure the flue stabilizer brace in position using the appropriate fasteners provided by CF + D. Use the same method that is used to secure the flue pipe (See Page 12).

After securing the flue stabilizer brace, connect four arms of the stabilizer brace to the ceiling using the aircraft cable.

Install the Stabilizer Bracket (If Applicable)

NOTE :

- **The custom stabilizer bracket is required when the finished floor to ceiling height is equal to or greater than 15 feet.**
- **The ideal place to install the stabilizer bracket is where flue pipe-1 and flue pipe-2 connect together (FINAL LOCATION TO BE DETERMINED BY OTHERS).**
- **Provided image is for illustration only. Actual product may vary.**

Once Flue Pipe-2 is installed, slide the stabilizer bracket from the bottom up to the joint between Flue Pipe-1 and Flue Pipe-2, as shown in Figure 8. Extend the flue stabilizer arm and fasten it to the wall at the back, as shown in Figure 8. Secure the flue stabilizer bracket in position using the appropriate fasteners provided by CF + D. Use the same method that is used to secure the flue pipe (See Page 12).

Now adjust the stabilizer bracket arm length and then secure the stabilizing bracket arm to sleeve by appropriate fasteners provided by CF + D.

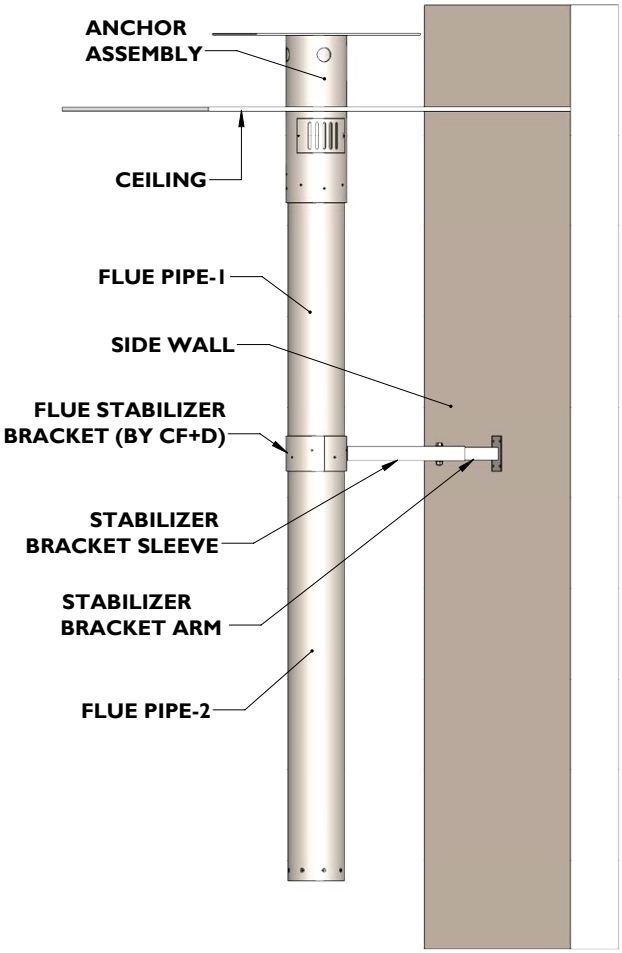

Figure 8

Install the Fireplace Body

Position the fireplace body with the Vapor-Fire burner facing the desired direction.

NOTE: If the fireplace unit includes a heater, refer to page 19 for additional information.

The electrical and water lines (if continuous plumbing has been chosen) are supplied and coiled together inside the fireplace. Before attaching the fireplace body to the flue pipe, uncoil the lines and using fish tape, pull the 1/4" water line up through the conduit in the flue pipe to its location beside the junction box. Then, pull the electrical wiring through the second conduit in the flue pipe up to the access door on the anchor pipe where the wires can be connected into the junction box.

NOTE: Please see Page 20 for Instructions on connecting the electrical and water lines.

To complete the connection, lift the fireplace body, ensuring that the notch on the fireplace body collar matches the alignment bar on the flue pipe. Raise the body until it reaches the bottom of the flue pipe. Place washer and nut through the fireplace opening and onto the protruding threaded rod inside the flue (See Figure 9). Tighten the nuts to ten-foot pounds of torque.

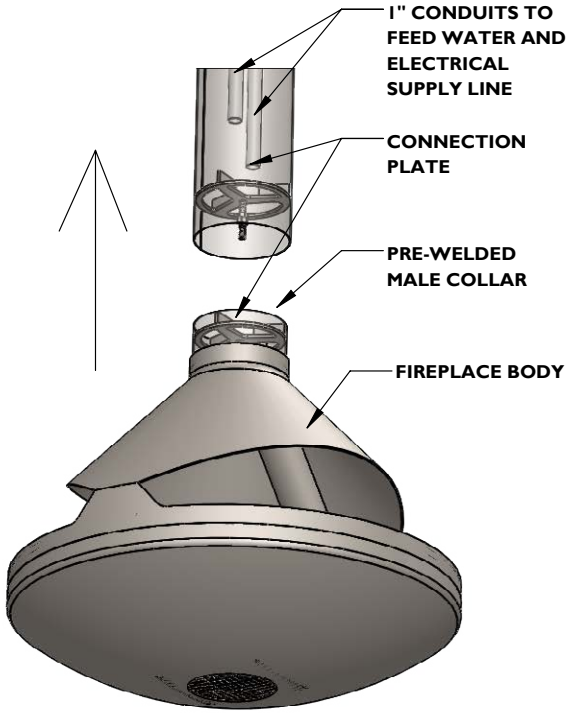

Figure 9

NOTE: This operation will require multiple people and/or use of an appropriate lifting device.

Electrical Diagram for Standard Model (No Heater)

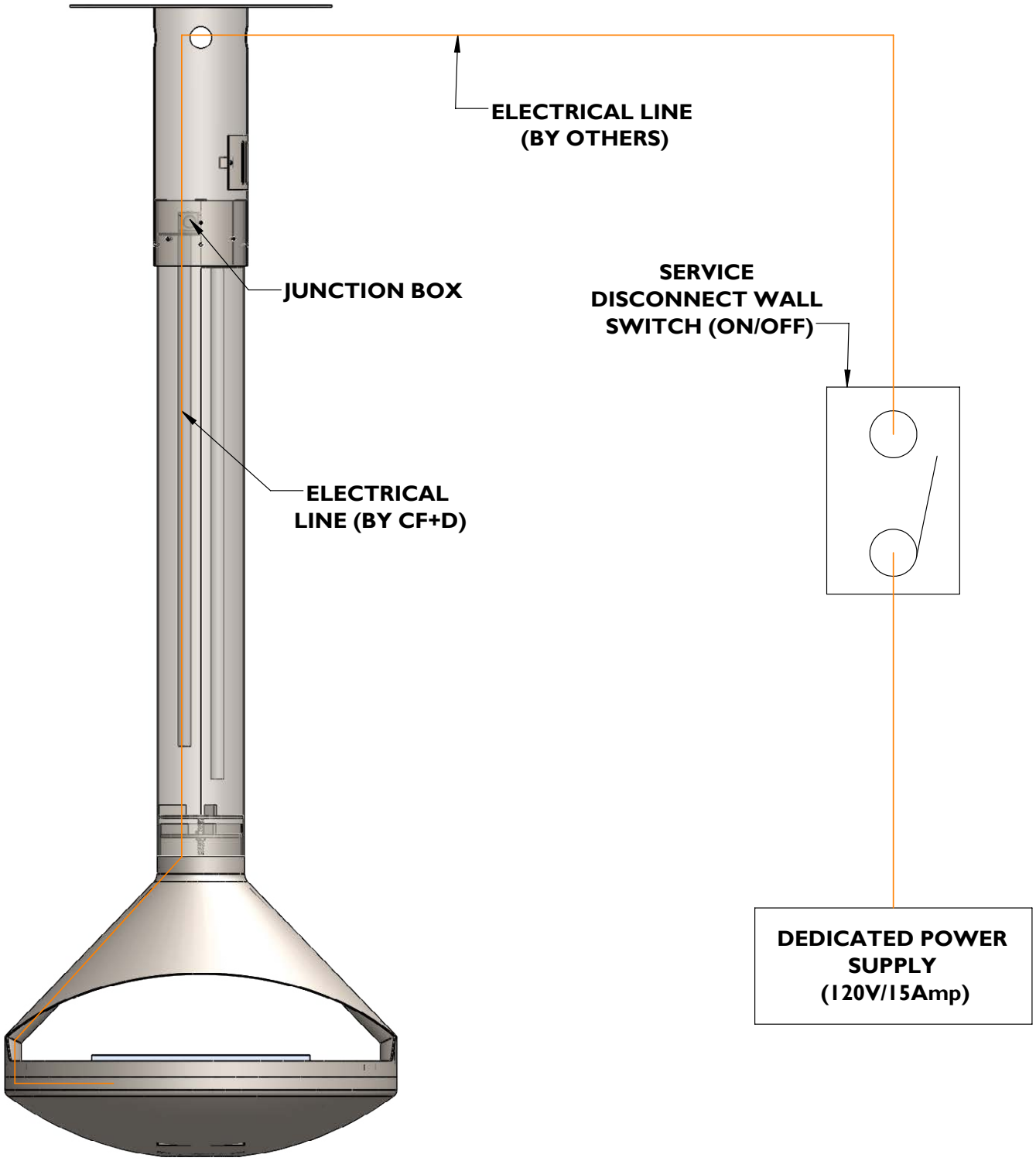

Figure 10

Electrical Diagram for Heater Model

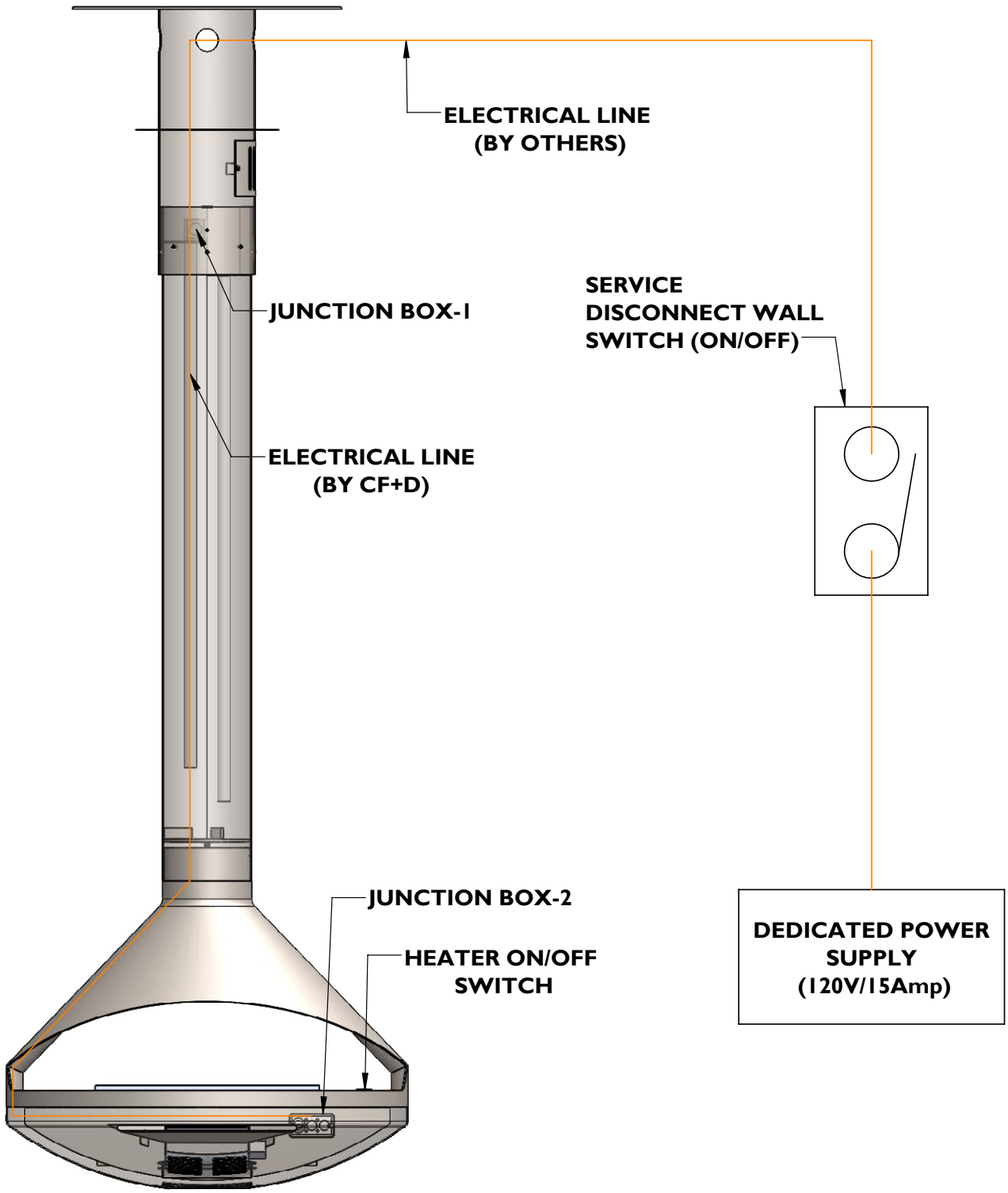

Figure 11

NOTE : VAPOR BURNER AND HEATER ARE FACTORY CONNECTED TO JUNCTION BOX-2

Install the Heater Electrical Connection (If Applicable)

NOTE : If the heater option has been selected, please follow the instructions below.

The heater and the burner are positioned in the fireplace body at the front. To access the electrical junction box-2 and the water connections to the burner and heater, remove the media tray from the top of the fireplace body.

The heater and burner are factory set and already connected to junction box 2. To supply electricity to junction box 1, extend the provided coiled electrical wire at the top end of the fireplace body through the provided conduit inside the flue pipe up to junction box 1 at the top end of the flue pipe (as shown on Page 18). Connect the coiled wire to junction box 1 using the access door at the anchor assembly. Then, feed electricity from the main 120V electrical power supply to junction box 1 through an on/off wall switch, as shown in the provided diagram on Page 18.

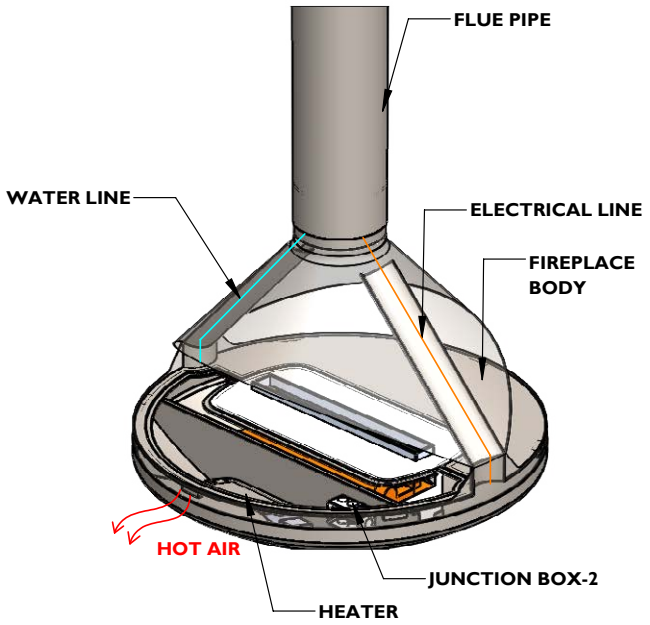

Figure 12

To operate the heater, first ensure that the wall switch is turned on. Then, use the dedicated on/off switch located on the media tray of the fireplace body to control the heater (See Figure 13).

NOTE: Do NOT turn on the circuit until all installation work is done.

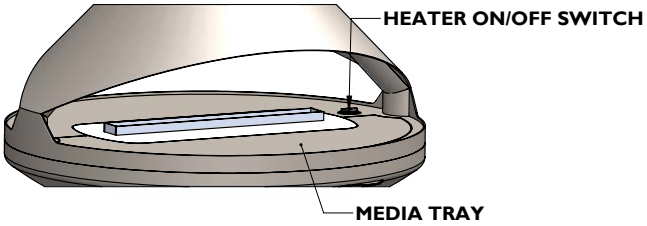

Figure 13

A 7" cutout is provided at the bottom of the fireplace body to ensure the required airflow for the proper functioning of the vapor burner. Slots are also provided at the bottom of the heater for sufficient airflow (See Figure 14).

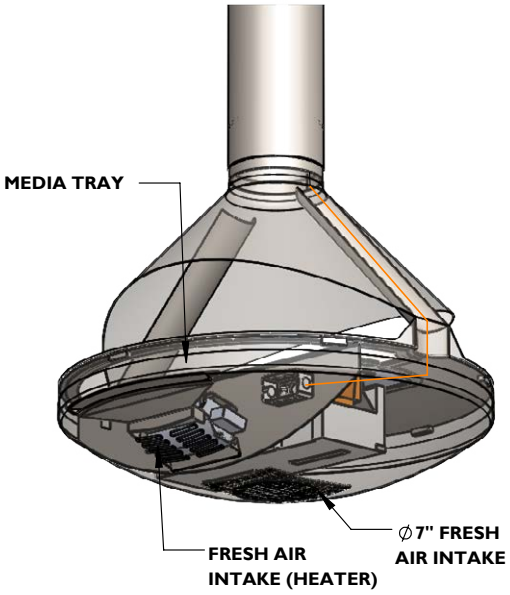

Figure 14

NOTE: THE FIREPLACE BODY IS SHOWN IN A TRANSPARENT VIEW FOR CLARITY.

Electrical Installation

NOTE: Complete all electrical work first. Do not turn on the electrical supply until plumbing has been completed.

The electrical connection and ¼" water line are supplied with the fireplace. The electrical connections for suspended fireplaces are located at the ceiling or roof where the fireplace will be hanging. An access/service panel is provided on the anchor body (See Page 9, Figure 1). Once the flue pipe has been inserted into the anchor body, the junction box can be accessed through this panel.

A dedicated circuit is required for the junction box. Connect a 120V GFCI wire with a 15 Amp service to the wires located on the left side of the unit.

Make sure to include the required dedicated on/off wall switch in your power supply to control the system.

NOTE: Make sure the main power supply is off before connecting the vapor fire burner.

Burner Plate Instruction

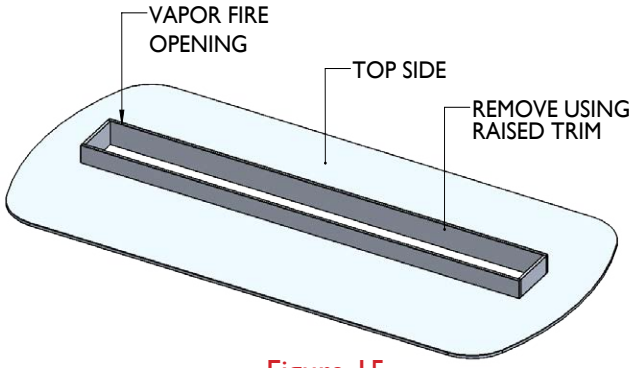

Figure 15

The burner plate serves three functions:

- The burner plate will be lifted to access the Vapor-Fire burner.
- To display the chosen media (rocks, glass, logs, etc.).
- To direct the airflow for optimum Vapor-Fire effect.

Tethered Controller Instruction

<u>IMPORTANT</u> :

THIS APPLIANCE IS INTENDED TO BE OPERATED BY A WALL SWITCH, THE TETHERED CONTROLLER ATTACHED TO THE BURNER AND SWITCH BOARD PROVIDED ON THE BURNER ARE FACTORY-SET AND SHOULD NOT BE ALTERED. TUCK TETHERED CONTROLLER BEHIND THE BURNER AND DO NOT TOUCH.

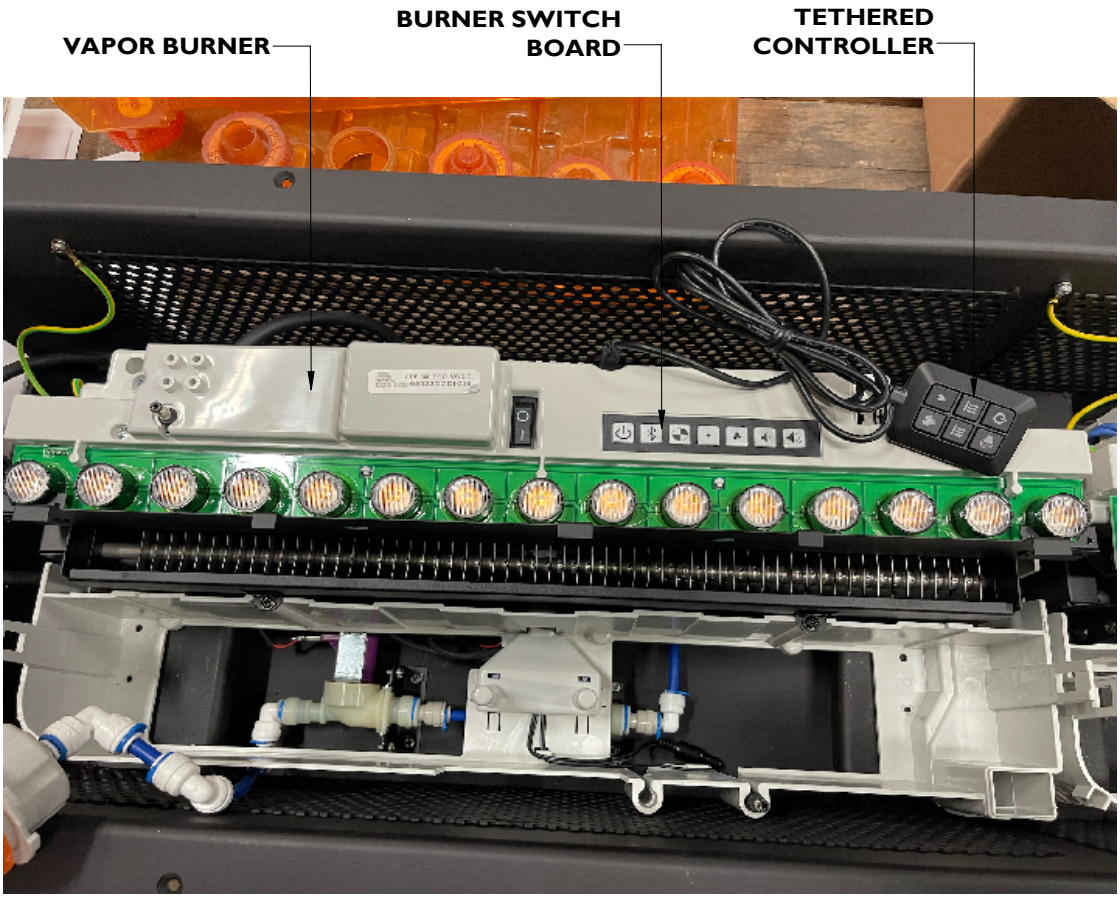

Figure 16

<u>NOTE</u> : The provided image is for illustration purposes only. The actual product may vary.

Vapor Burner | Option-1 : Plumbed-In System

Vapor-Fire Burner

Remove the burner plate to access the burners (See Page 20). The Vapor-Fire burner is factory set and ready for the initial fill. Confirm that all electrical and plumbing connections have been completed before proceeding to the next step.

Instructions for Continuous Plumbed-In Systems

- The plumbing accessory kit is designed for use with copper piping.
- Ensure that all plumbing connections meet local plumbing code requirements.
- Ensure that the location of the plumbing connection allows for easy access for shutoff during scheduled maintenance.

Normal tap water (cold) can be used in the Vapor-Fire unit as long as it is not considered to be hard water. In the event your tap water is hard, softened water is recommended.

NOTE: Plumbing connections should be done by an experienced plumber familiar with plastic tubing and connectors.

Once the 1/4" water line has been fished up from the fireplace body, through the flue pipe to the ceiling, it can be connected to the main-source line. Downsize the main 1/2" plumbing line to the 1/4" tube and connect. Please note, the 1/4" tube is already connected to the burner (connection located at front right bottom corner of burner). Test for water leaks and make sure connections are leak proof.

Access the Vapor-Fire burner to complete the initial fill process by lifting the media plate.

Initial Fill Instructions

There are two ways to complete the initial fill. Both are acceptable whether you have chosen the plumbed-in or manual fill options.

Each VITA Fireplace is supplied with an orange initial fill bottle which is used for priming the reservoir, and/or on a regular basis (manual fill option). Please refer to Page 23 for Initial Fill Option 2 (using the orange bottle).

Initial Fill Option 1: Fill the Reservoir Directly

Remove the plumbing fill cap assembly by gently twisting clockwise and move cap to side (See Images A & B). For manual fill VITA Fireplaces, there will not be a plumbing fill cap assembly present.

A)

B)

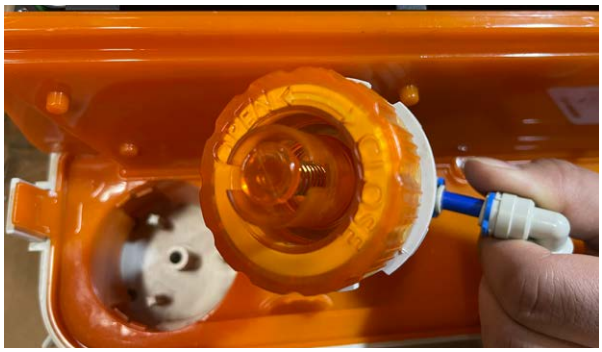

Remove the top cover assembly on the burner by depressing side tabs gently (See Images C & D on Page 23).

C)

D)

Now it's time to fill the water reservoir(s) with 33.5 oz (1L) of water. Take note of the water level markers (see image E below). Ensure that the water level is filled between the markers to allow the system to learn the proper level to maintain during operation.

E)

Now, replace the assembly making sure that clips are secure and connect the plumbing fill cap assembly (if applicable).

Then, replace the burner plate by holding the top lifting tabs with the opening facing upwards (See Burner Plate Instructions Page 20). Place the burner plate into the opening on the media tray. Ensure that all edges are flush and snug so that the media tray is flat.

Now arrange your chosen media as desired on top of the media tray. Use caution not to overlap the Vapor-Fire opening as this can interrupt the flame affect. See next page for continued instructions.

Initial Fill Option 2: Fill the Reservoir Using the Orange Bottle

If you have chosen the plumbed-in option, remove the plumbing fill cap assembly (as outlined on Page 22). If your VITA fireplace uses the manual fill option, there is no plumbing fill cap assembly.

Fill the orange initial fill container with regular tap water and secure the cap without over-tightening. Place the container into the tray with the valve facing downwards, as shown below. The valve should fit gently into the socket used for the plumbing fill cap assembly (See Image B on Page 22). There's no need to tighten it.

F)

Allow the water to drain into the reservoir through the valve. You will hear a gurgling sound. Once the water stops draining into the reservoir below, the sound will stop. This means that the Vapor-Fire reservoir has filled to the optimal level.

NOTE: For the plumbed-in option, replace the plumbing fill cap assembly and burner plate. For the manual fill Vapor-Fire, refill the initial fill bottle and keep it for regular operation.

Now arrange your chosen media as desired on top of the media tray. Use caution not to overlap the Vapor-Fire opening as this can interrupt the flame affect. See next page for continued instructions.

Option-2 : Manual-Fill System

Instructions for Manual Fill System

- Remove the burner plate using the top lifting tabs to access the burners (refer to page 20).
- Remove the orange plastic container.
- Manually fill the supplied container with 1 litre of water.
- Secure the top without over-tightening.
- Place the container back into position, the water in the container will drain into the reservoir which will fill to the level required for maximum operation (See Page 23 Image E).
- After the plastic container is empty or stops flowing into the reservoir, it has now filled to the level required.
- Refill the container with water and replace into position. The maximum operating cycle time will be between 8 to 10 hours.
- Replace the burner plate by holding the raised trim with the opening facing upwards (See Burner Plate Instructions Page 20). Place the burner plate into the opening on the media tray. Ensure that all edges are flush and snug so that the burner plate is flat.
- Now arrange your chosen media as desired on top of the media tray. Use caution not to overlap the Vapor-Fire opening as this can interrupt the flame affect.

NOTE : The Vapor-Fire burner system has been factory set for optimum flame effect. No adjustments required.

Test-Firing System

Do not attempt to test-fire the system until all plumbing and electrical work is complete, and the correct starting water level has been established. Failure to follow this instruction could lead to incorrect operation and potential overflow.

NOTE: If after the test fire stage the unit will be turned off to complete construction, it is recommended to first drain all water from the reservoirs and/or refill containers and dry to protect the transducers from sitting idle in water for extended periods.

CF + D | custom fireplace design

Quality Creativity Innovation

All CF + D and VITA | Fireplace models are guaranteed against any defect in design, construction, or manufacture, and guaranteed to function properly for five (5) years from date of receipt of goods. The electrical and electronic components within the fireplace are warrantied against any defect in design, construction, or manufacture, and guaranteed to function properly for one (1) year from the date of commissioning. Our product guarantees are applicable only when our Fire Features have been installed with respect to all local building codes and with strict attention to the technical details outlined in our Shop Drawings, as well as our installation, maintenance, and user manuals. Our guarantee excludes accidental damage occurring during transportation without written notification upon receipt, damage incurred during installation, and damage resulting from improper use, and is limited to the replacement of the defective part or unit in its entirety at the sole discretion of CF + D, the manufacturer. This warranty does not include the reimbursement of labor cost or related costs incurred to conduct the replacement of parts or entire unit should it be deemed necessary.

We thank you for your support and your business!

CF + D | custom fireplace design
5230 Harvester Rd. #2
Burlington, Ontario L7L 4X4
T: 905-681-3070
Toll Free: 1-866-909-3070
www.customfireplacedesign.com

North American Designed and Manufactured by CF + D | custom fireplace design

IMPORTANT !

INITIAL SETUP + COMMISSIONING ASSISTANCE

For advice on proper placement of materials for optimum performance and visual appearance please contact us while setting up the fireplace at **+1 905-681-3070** or toll free **+1 866-909-3070**. We can also be available for a scheduled video call as required.

Thank You
CF + D | custom fireplace design

Vapor-Fire

By

CF + D | custom fireplace design

Service Manual

Model

CDFI500-PRO

6909660400

IMPORTANT SAFETY INFORMATION : Always read this manual first before attempting to service this cassette. For your safety, always comply with all warnings and safety instructions contained in this manual to prevent personal injury or property damage.

CF + D | custom fireplace design
5230 Harvester Rd, #2
Burlington ON. CA L7L 4X4
T : 1-866-909-3070
www.customfireplacedesign.com

In keeping with our policy of continuous product development, we reserve the right to make changes without notice.

Table Of Contents

Vapor-Fire Service Manual

Important Instructions.....29 & 30

Exploded Parts Diagram - CDFI500.....31

Wiring Diagram.....32

Water Flow Diagram.....32

Operation.....33 - 34

Maintenance.....35

Cleaning.....36

Replacement Part Procedures

Switch Board Replacement.....37

Terminal Block Replacement.....37

Fan Assembly Replacement.....38

Fused Wire Harness Replacement.....38

Main Control Board Replacement.....39

LED Driver Board Replacement.....39

Power Supply Replacement.....40

LED Light Assembly Replacement.....40

Heating Element Replacement.....41

Level Sensor Assembly Replacement.....42

Solenoid Valve Replacement.....42

Troubleshooting Guide.....44 - 47

Always use a qualified technician or service agency to repair this cassette.

NOTE : Procedures and techniques that are considered important enough to emphasize.

CAUTION : Procedures and techniques which, if not carefully followed, will result in damage to the equipment.

WARNING : Procedures and techniques which, if not carefully followed, will expose the user to the risk of fire, serious injury, or death.

IMPORTANT INSTRUCTIONS

When using electrical appliances, basic precautions should always be followed to reduce the risk of fire, electric shock, and injury to persons, including the following:

- Read all instructions before using the unit.
- Do not operate any unit if the unit has been dropped or damaged in any manner.
- Do not use outdoors.
- Extreme caution is necessary when any heater is used by or near children and whenever the heater is left operating and unattended.
- Do not operate any heater after it malfunctions. Disconnect power at service panel and have heater inspected by a reputable electrician before reusing.
- To disconnect the unit, turn the controls OFF, disconnect power at the service panel.
- Do not insert or allow foreign objects to enter any ventilation or exhaust opening as this may cause an electric shock or fire, or damage the heater.
- To prevent a possible fire, do not block air intakes or exhaust in any manner.
- All electrical heaters have hot and arching or sparking parts inside. Do not use in areas where gasoline, paint, or flammable liquids are used or stored.
- Do not modify the unit. Use it only as described in this manual. Any other use not recommended by the manufacturer may cause fire, electric shock or injury to persons.
- Do not burn wood or other materials in the unit.
- Always use a certified electrician should new circuits or outlets be required.
- Disconnect the power supply before performing any cleaning, maintenance or relocation of the unit.
- When transporting or storing the unit, keep in a dry place, free from excessive vibration and store so as to avoid damage.

WARNING : Remote control contains small batteries. Keep away from children. If swallowed, seek medical attention immediately.

WARNING : Do not install battery backwards, charge, put in fire or mix with used or other battery types - may explode or leak causing injury.

NOTE: Any changes or modifications not approved by CF + D could void the warranty and/or render the unit inoperable.

IMPORTANT INSTRUCTIONS

CAUTION : This equipment has been tested and found to comply with the limits for Class B digital device, pursuant to part 15 of the FCC Rules. These limits are designed to provide reasonable protection against harmful interference in a residential installation. This equipment generates, uses and can radiate radio frequency energy and, if not installed and used in accordance with the instructions, may cause harmful interference to radio or television reception, which can be determined by turning the equipment OFF and ON. The user is encouraged to try to correct the interference by one or more of the following measures :

- Reorient or relocate the receiving antenna.
- Increase the separation between the equipment and the receiver.
- Connect the equipment into an outlet on a circuit different from that to which the receiver is connected.
- Consult the dealer or an experienced radio/TV technician for help.

This device complies with Part 15 of the FCC Rules. Operation is subject to the following two conditions: (1) This device may not cause harmful interference, and (2) this device must accept any interference received, including interference that may cause undesired operation.

FCC CAUTION : Any changes or modifications not expressly approved by the party responsible for compliance could void the user's authority to operate this equipment.

CAUTION

RISK OF ELECTRICAL SHOCK
DO NOT OPEN
NO USER-SERVICEABLE PARTS INSIDE

SAVE THESE INSTRUCTIONS

Exploded Parts Diagram - CDFI500

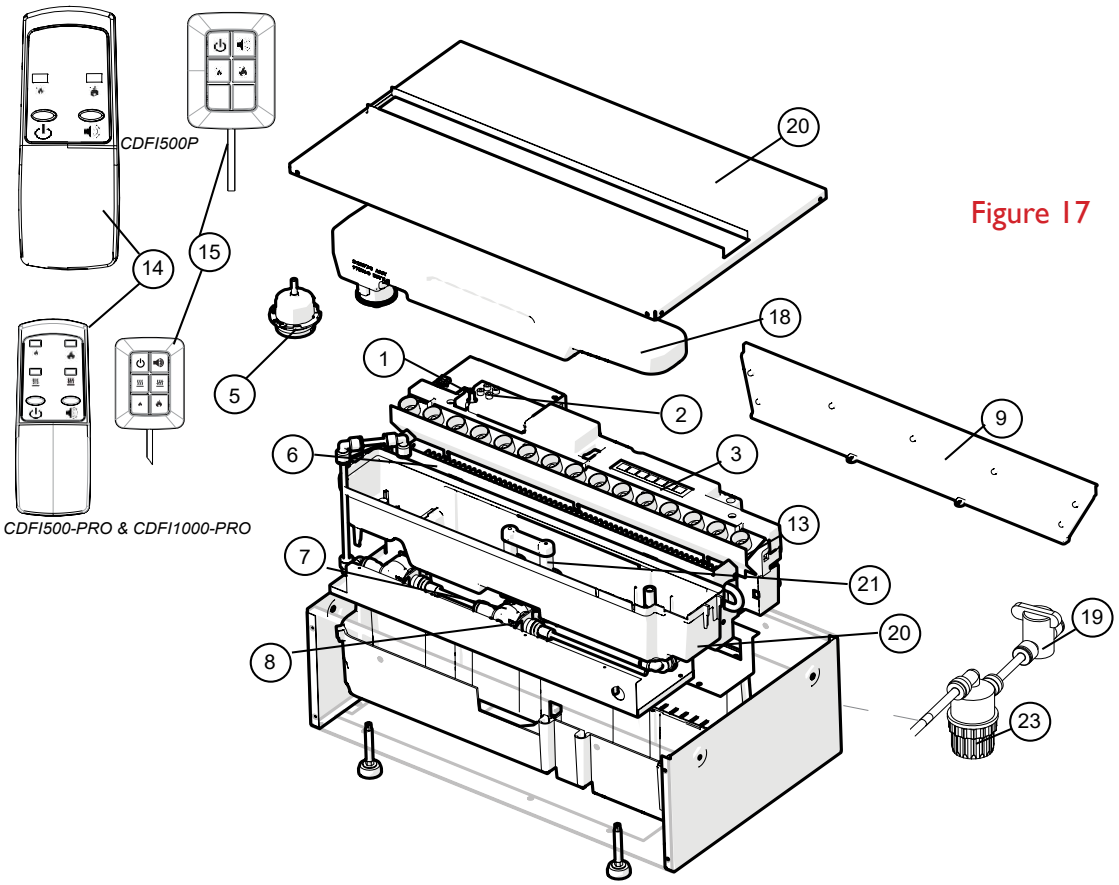

Figure 17

Replacement Parts List - CDFI500P, CDFI500-PRO

1. Main Control Board
   - CDFI500P (all MODs) 9601270200RP
   - CDFI500-PRO (MOD 0-D) 9601270200RP
   - MOD E (w/o LED Driver) 9601270400RP
   - LED Driver (MOD C+) 9601270300RP
2. Terminal Block. 9601260100RP
3. Switch Board. 9601290100RP
4. Power Supply 9601300100RP
5. Fill Cap Assembly 9601230100RP
6. Heating Element 9601240100RP
7. Level Sensor Assembly. 9601320100RP
8. Solenoid Valve (2). 9601330100RP
9. Top Cover Assembly 9601220100RP
10. Fan Assembly 9601310100RP
11. Fan Filter. 8600300100RP
12. Transducer 9601210100RP
13. LED Assembly MOD 0-B (Orange) 9601250100RP
    - PRO MOD C (Yellow) 9601250200RP
14. Remote Control
    - CDFI500P 9601110200RP
    - CDFI500-PRO 9601110300RP
15. Tethered Controller / Receiver
    - CDFI500P 9601120200RP
    - CDFI500-PRO 9601120300RP
    - MOD E 9601120400RP
16. Fused Wire harness 9601340100RP
17. Electronic Choke. 9601380100RP
18. Removable Refill Container with Cap . .9601350100RP
19. Ball Valve 9601360100RP
20. Top Plate
    - CDFI500P 9601070200RP
    - CDFI500-PRO 9601070400RP
21. Sump. 9601200100RP
22. Floats and stopper 9602550100RP
23. Mesh Filter 9601370100RP
24. Red lock clips (package of 5) 9602490100RP
25. Tether Wire Harness 9601080100RP
26. Flame Baffles 9601460100RP

Wiring Diagram

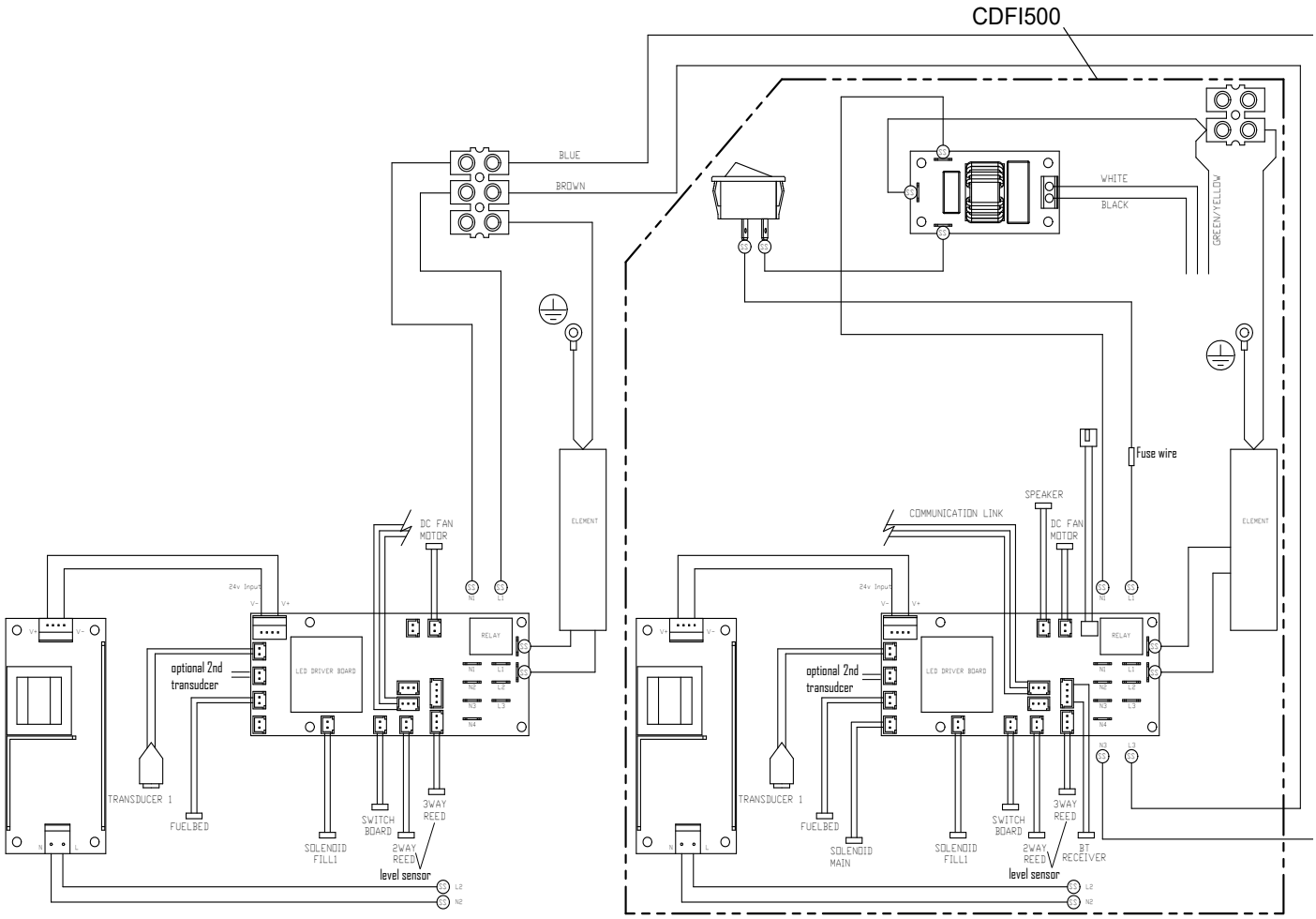

Figure 18

Water Flow Diagram

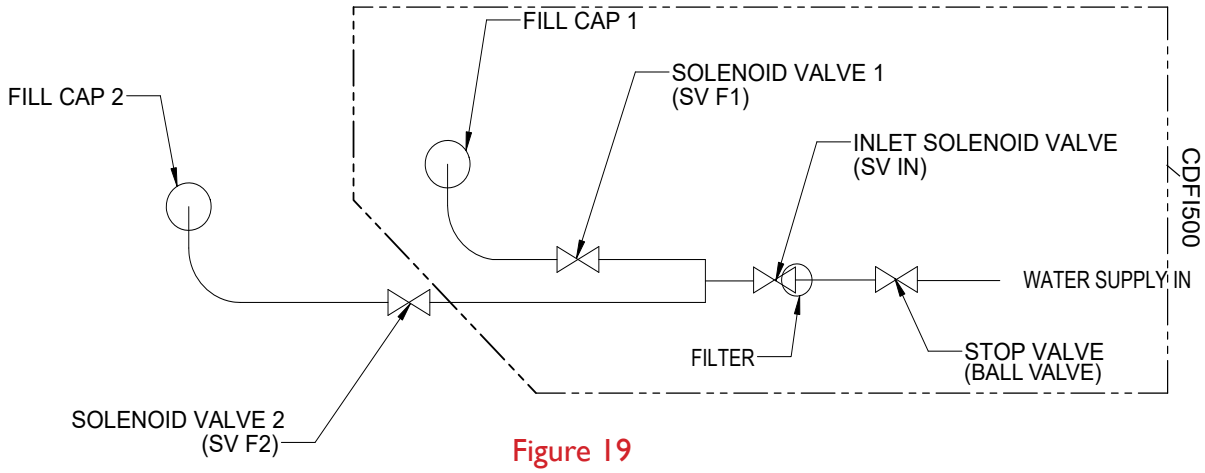

Figure 19

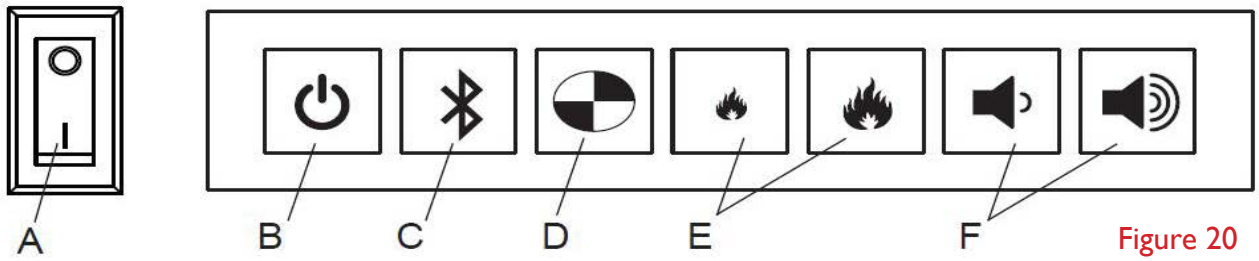

Figure 20

WARNING : This unit must be properly installed before it is used. There are three different control options available for the unit in addition to the WALL SWITCH that is required with every installation: manually using the Switch Board located under the media panel (see Figure 20), tethered controller (see Figure 21, must remain connected & tucked behind unit) and a remote control (see Figure 21).

SWITCH BOARD CONTROLS :

A. On/Off Switch Supplies power to the unit.

B. Standby Turns flame effect on or puts the unit into standby mode.

NOTE : When the unit is first turned on the lights will come on and mist will appear 45 seconds later.

C. Remote Control Initialization

Required for initializing the remote together with the Cassette, see initialization instructions for more detail.

D. Test Mode

Use for troubleshooting issues (See Page 47).

E. Flame Intensity Control

Adjusts the intensity of the flame and smoke effect when the unit has been activated. Pressing will decrease the flame effect and pressing will increase the flame effect (it may take a few moments for the changes to apply).

F. Volume Control

Adjusts the volume of the wood fire sound effects. Pressing will decrease the volume and pressing will increase the volume.

On the Remote and Tethered Controls :

Pressing will turn the volume 'ON' (I) and 'OFF' (O).

G. Heat On/Off

Not applicable to VITA Fireplace units.

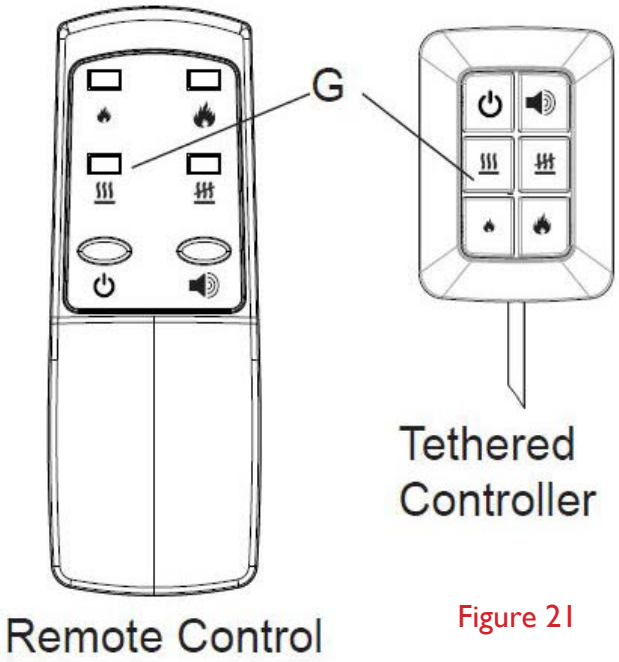

Figure 21

NOTE : When the unit is used in an environment where background noise is very low, it may be possible to hear a sound which is related to the operation of the flame effect. This is normal and should not be a cause for concern.

NOTE : During normal operation it is expected to see some condensation of water on the media plate. This will vary depending on ambient conditions and should be considered normal.

NOTE : When the water tank is empty, the flame effect shuts OFF and the LED's will blink twice, continuously.

NOTE : For all models with more than one CDFI-500 burner, each burner must be adjusted individually.

Remote Control :
The tethered controller can be used in the same manner as the remote but houses a receiver for communication with the remote.
The tethered controller must be connected to the unit and On/Off Switch must be in the 'ON' (I) position in order for the remote to operate.

NOTE : To operate correctly, the remote control must be initialized with the unit.

Remote Control Initialization / Reprogram :
In order for the remote to communicate with the unit the receiver must be setup, as outlined below:

1. Verify that the tethered controller is connected correctly - the red light on the controller will be illuminated.
2. Place the On/Off Switch (Figure 20) in the ON (I) position.
3. Press the initialization button on the Switch Board (for CDFI-1000 units, use the primary Switch Board - left side unit).
4. The unit will begin to beep and turn the lights ON and OFF every 2 ½ seconds to indicate that the unit is in synchronization mode.
5. Within 20 seconds of pressing the button, press any button on the remote control (Figure 21).

NOTE : You will have only 20 seconds to perform this last step. Failure to do so will result in these steps needing to be followed again.

If the synchronization was successful the LED's will blink 5 times and beep 5 times then the unit will go to Standby.
This will synchronize the remote control and the tethered controller.
NOTE : It is possible to synchronize up to 5 units to one remote control.

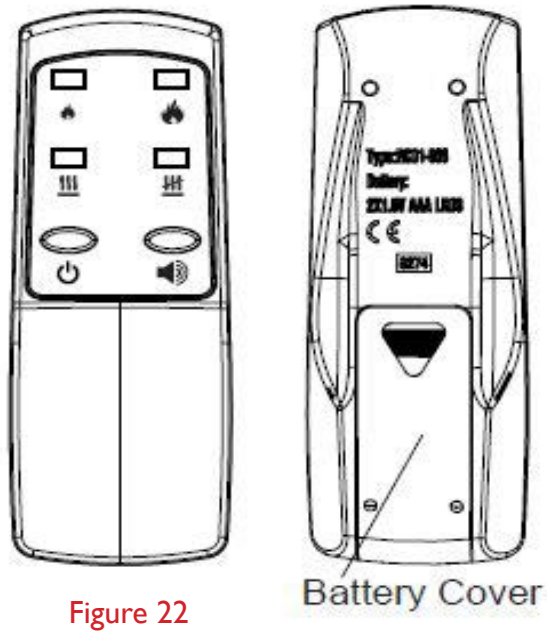

Figure 22

Battery Replacement
To replace the battery :

1. Slide battery cover open on the remote control (Figure 22).
2. Install two 1.5 Volt (AAA) batteries in the battery holder.
3. Close the battery cover. Batteries must be recycled or disposed of properly. Check with your Local Authority or Retailer for recycling advice in your area.

MAINTENANCE

WARNING : Disconnect power before attempting any maintenance or cleaning to reduce the risk of fire, electric shock or damage to persons.

Filling the water tank :

When the water tank is empty, the flame effect will shut OFF and the LED's will blink continuously. Follow these steps to refill the tank.

CAUTION : Allow at least five minutes for components to cool before disassembling the unit to refill.

1. Gently remove the media and burner plate, placing them carefully on the ground.
2. Turn the Switch Board On/Off switch to the OFF position (O) (Figure 20).
3. Remove the refill container by lifting upwards and outwards.
4. Refill the container with tap water.

NOTE : Normal tap water (cold) can be used in the Vapor-Fire Burner as long as it is not considered to be hard water. The ideal hardness level for optimum performance is between 1.0 - 7.0gpg or 17 - 120ppm. In the event your tap water is hard (above 7.0gpg or 120ppm), you may use softened water or distilled water with 1/8 tsp. of salt (0.5 ml) added to the water reservoir. (The use of additional salt should only be when you notice that the unit is not producing mist as expected).

5. Screw the cap back on, do not over tighten.
6. Return the refill container to the sump, with the tank cap facing down and the flat side of the tank facing outward.
7. Turn the On/Off switch to the ON position (I) (Figure 20).
8. Gently place the burner plate and media back into position.

If you do not intend on using the unit for longer than 2 weeks, empty and drain the unit of water, and dry all of the water containing components.

Transducer Replacement

After prolonged usage the ability for the unit to produce mist may become reduced. When this occurs the replacement of the transducer may be required. This unit comes with additional transducer(s), located within the unit, which can be installed when this occurs.

NOTE : There is a small tab that holds the transducer in place, that needs to be released before it can be removed.

CLEANING

Cleaning :
It is required that the top cover assembly, sump and transducer are cleaned with soap and water on a biweekly basis, or at a minimum once per month after initial commissioning. This time frame can be extended depending on the water hardness levels, at the discretion of the client.

CAUTION : Do not put plastic components in the dishwasher.
The water filter should be rinsed out on a regular basis to remove any collected particles.

Filter Cleaning
The air filters can be removed and gently rinsed with water for cleaning, then dried on a towel before reinstalling.

NOTE : Replace the filter so that the coarse black filter is facing the back of the unit.

Surface Cleaning :
Use a warm damp cloth only to clean surfaces of the unit. Do not use abrasive cleaners.

NOTE : If you need to move the unit, ensure that all of the components that contain water have been emptied before relocating.

Servicing :
Except for installation and cleaning described in this manual, an authorized service representative should perform any other servicing.

Switch Board | Terminal Block

Switch Board Replacement

Tools Required: Phillips head screwdriver

WARNING: Disconnect power before attempting any maintenance to reduce the risk of electric shock or damage to persons.

! NOTE: Ensure that all of the components that contain water have been emptied and source water has been turned off before performing any maintenance.

1. Disconnect and remove the media tray or log set from the unit and put them in a safe place.
2. On the side the replacement is required, remove the securing screws and metal wire cover.
3. Remove the 4 screws and the electronics cover from the unit. (Figure 23)

- **! NOTE:** Use caution when removing the electronics cover, to prevent strain on the connector wire attached to it.

4. Locate the switch board to be replaced.
5. Gently lift the switch board off of the mounting stands.
6. Disconnect the wire connection from the back of the board.
7. Attach the wire connection to the new board and place on the mounting stands.
8. Re-assemble the remainder of the cassette in reverse order from the instructions above.

Terminal Block Replacement

Tools Required: Phillips head screwdriver

WARNING: Disconnect power before attempting any maintenance to reduce the risk of electric shock or damage to persons.

! NOTE: Ensure that all of the components that contain water have been emptied and source water has been turned off before performing any maintenance.

1. Disconnect and remove the media tray or log set from the unit and put them in a safe place.
2. On the secondary side remove the securing screws and metal wire cover.
3. Remove the 4 screws and the electronics cover from the unit. (Figure 23)

- **! NOTE:** Use caution when removing the electronics cover, to prevent strain on the connector wire attached to it.

4. Locate the terminal block to be replaced.
5. Disconnect the wire connections from the original block and install it on the new block.
6. Replace the terminal block in the original position the terminal block is located so that it sits on the moulded pins on the surface below.
7. Re-assemble the remainder of the cassette in reverse order from the instructions above.

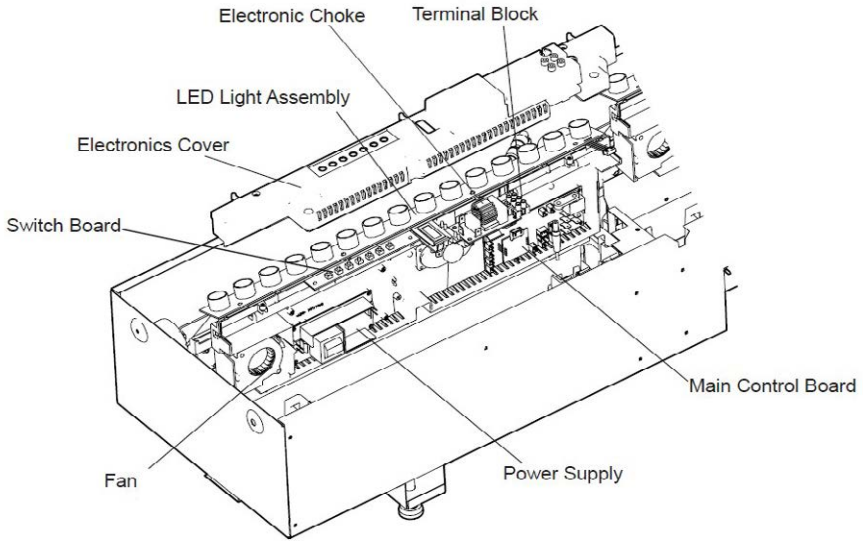

Figure 23

Fan Assembly | Fused Wire Harness

Fan Assembly Replacement

Tools Required: Phillips head screwdriver

WARNING: Disconnect power before attempting any maintenance to reduce the risk of electric shock or damage to persons.

! NOTE: Ensure that all of the components that contain water have been emptied and source water has been turned off before performing any maintenance.

Primary Side

1. Disconnect and remove the media tray or log set from the unit and put them in a safe place.
2. Remove the securing screws and metal wire cover at the end of both of the electronics covers.
3. Remove the 4 screws and both of the electronics covers from the unit. (Figure 23)

- **! NOTE:** Use caution when removing the electronics cover, to prevent strain on the connector wire attached to it.

4. Holding the assembly at either end of the LED light strip, on the primary end, gently lift the electronics assembly out of the unit (Figure 23).

- **! NOTE:** There are several wires that run between the two sides, these wires will need to be gently removed through the opening on the secondary side to allow the primary electronics assembly to be lifted out.

5. Locate the fan assembly.
6. Trace the control wires to the main control board and disconnect.
7. Replace with wire from new fan.
8. Run wiring back to location for fan, and install the fan.
9. Reinsert the electronics assembly.

- **CAUTION:** Ensure that the switchboard and terminal block have not moved from their original locations and all wires are contained under the cover before reassembly.

10. Re-assemble the remainder of the cassette in reverse order from the instructions above.

Fused Wire Harness Replacement

Tools Required: Phillips head screwdriver

WARNING: Disconnect power before attempting any maintenance to reduce the risk of electric shock or damage to persons.

! NOTE: Ensure that all of the components that contain water have been emptied and source water has been turned off before performing any maintenance.

Primary Side

1. Disconnect and remove the media tray or log set from the unit and put them in a safe place.
2. Remove the securing screws and metal wire cover at the end of both of the electronics covers.
3. Remove the 4 screws and both of the electronics covers from the unit. (Figure 23)

- **! NOTE:** Use caution when removing the electronics cover, to prevent strain on the connector wire attached to it.

4. Remove the cable clamp, to allow for the assembly to be lifted out to better access the components.
5. Holding the assembly at either end of the LED light strip, on the primary end, gently lift the electronics assembly out of the unit (Figure 23).

- **! NOTE:** There are several wires that run between the two sides, these wires will need to be gently removed through the opening on the secondary side to allow the primary electronics assembly to be lifted out.

6. Locate the fused wire harness (brown wire) from main switch to main control board with in line fuse.
7. Replace current wire harness with new wire harness.

- **! NOTE:** A flat head screwdriver can be used to gently pry between the end of the connector and the switch to release the wires.

8. Replace all of the wiring to their original locations and reinsert the electronics assembly.

- **CAUTION:** Ensure that the switchboard and terminal block have not moved from their original locations and all wires are contained under the cover before reassembly.

9. Re-assemble the remainder of the cassette in reverse order from the instructions above.

Main Control Board Replacement

Tools Required: Phillips head screwdriver
WARNING: Disconnect power before attempting any maintenance to reduce the risk of electric shock or damage to persons.
! NOTE: Ensure that all of the components that contain water have been emptied and source water has been turned off before performing any maintenance.

Primary Side

1. Disconnect and remove the media tray or log set from the unit and put them in a safe place.
2. Remove the securing screws and metal wire cover at the end of both of the electronics covers.
3. Remove the 4 screws and both of the electronics covers from the unit. (Figure 23)

- **! NOTE:** Use caution when removing the electronics cover, to prevent strain on the connector wire attached to it.

4. Remove the cable clamp, to allow for the assembly to be lifted out to better access the components.
5. Holding the assembly at either end of the LED light strip, on the primary end, gently lift the electronics assembly out of the unit (Figure 23).

- **! NOTE:** There are several wires that run between the two sides, these wires will need to be gently removed through the opening on the secondary side to allow the primary electronics assembly to be lifted out.

6. Locate the main control board.
7. Transfer the wires from the old board to the new board.

- **NOTE:** A flat head screwdriver can be used to gentle pry between the end of the connector and the switch to release the wires.
- **MOD E-F:** Remove the LED driver board from the old main control board and connect it to the new main control board.

8. Remove the old board from the unit and replace with the new board.
9. Replace all of the wiring to their original locations and reinsert the electronics assembly.

- **CAUTION:** Ensure that the switchboard and terminal block have not moved from their original locations and all wires are contained under the cover before reassembly.

10. Re-assemble the remainder of the cassette in reverse order from the instructions above.

LED Driver Board Replacement

Tools Required: Phillips head screwdriver
WARNING: Disconnect power before attempting any maintenance to reduce the risk of electric shock or damage to persons.
! NOTE: Ensure that all of the components that contain water have been emptied and source water has been turned off before performing any maintenance.

1. Follow the steps to access the main board on both sides of the cassette.
2. Locate and disconnect the old LED driver board (Figure 24).
3. Plug in the new LED driver board.
4. Re-assemble the remainder of the cassette in reverse order from the instructions given in the "Main Control Board Replacement" instructions.

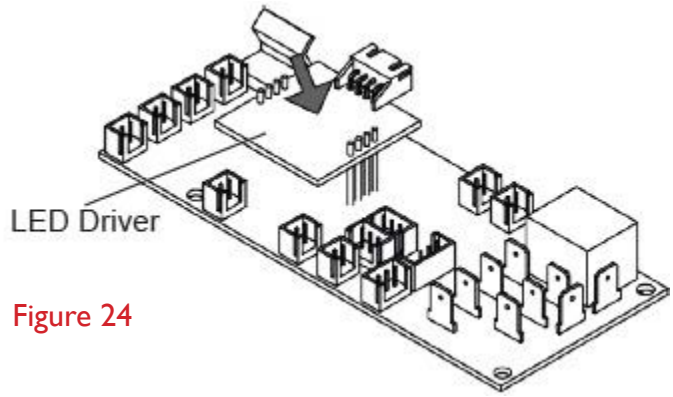

Figure 24

Power Supply Replacement

Tools Required: Phillips head screwdriver

WARNING: Disconnect power before attempting any maintenance to reduce the risk of electric shock or damage to persons.

! NOTE: Ensure that all of the components that contain water have been emptied and source water has been turned off before performing any maintenance.

Primary Side

1. Disconnect and remove the media tray or log set from the unit and put them in a safe place.
2. Remove the securing screws and metal wire cover at the end of both of the electronics covers.
3. Remove the 4 screws and both of the electronics covers from the unit. (Figure 23)

- **! NOTE:** Use caution when removing the electronics cover, to prevent strain on the connector wire attached to it.

4. Remove the cable clamp, to allow for the assembly to be lifted out to better access the components.
5. Holding the assembly at either end of the LED light strip, on the primary end, gently lift the electronics assembly out of the unit (Figure 23).

- **! NOTE:** There are several wires that run between the two sides, these wires will need to be gently removed through the opening on the secondary side to allow the primary electronics assembly to be lifted out.

6. Locate the power supply assembly.
7. Transfer the wires from the old board to the new board.

- **! NOTE:** A flat head screwdriver can be used to gently pry between the end of the connector and the switch to release the wires.

8. Remove the old board from the unit and replace with the new board.
9. Replace all of the wiring to their original locations and reinsert the electronics assembly.

- **CAUTION:** Ensure that the switchboard and terminal block have not moved from their original locations and all wires are contained under the cover before reassembly.

10. Re-assemble the remainder of the cassette in reverse order from the instructions above.

LED Light Assembly Replacement

Tools Required: Phillips head screwdriver

- **WARNING:** Disconnect power before attempting any maintenance to reduce the risk of electric shock or damage to persons.
- **! NOTE:** Ensure that all of the components that contain water have been emptied and source water has been turned off before performing any maintenance.

Primary Side

1. Disconnect and remove the media tray or log set from the unit and put them in a safe place.
2. Remove the securing screws and metal wire cover at the end of both of the electronics covers.
3. Remove the 4 screws and both of the electronics covers from the unit. (Figure 23)

- **! NOTE:** Use caution when removing the electronics cover, to prevent strain on the connector wire attached to it.

4. Remove the cable clamp, to allow for the assembly to be lifted out to better access the components.

5. Holding the assembly at either end of the LED light strip, on the primary end, gently lift the electronics assembly out of the unit (Figure 23).
- **! NOTE:** There are several wires that run between the two sides, these wires will need to be gently removed through the opening on the secondary side to allow the primary electronics assembly to be lifted out.
6. Gently lift the LED light assembly off of the standoffs.
7. Trace the control wire back to the main control board and replace with the wire from the new assembly.
8. Install the new LED light assembly, ensuring that all of the wires are installed in the same location as the previous one.
9. Replace all of the wiring to their original locations and reinsert the electronics assembly.
- **CAUTION:** Ensure that the switchboard and terminal block have not moved from their original locations and all wires are contained under the cover before reassembly.
10. Re-assemble the remainder of the cassette in reverse order from the instructions above.

Heating Element Replacement

Tools Required: Phillips head screwdriver

- **WARNING:** Disconnect power before attempting any maintenance to reduce the risk of electric shock or damage to persons.
- **! NOTE:** Ensure that all of the components that contain water have been emptied and source water has been turned off before performing any maintenance.

Primary Side

1. Disconnect and remove the media tray or log set from the unit and put them in a safe place.
2. Remove the securing screws and metal wire cover at the end of both of the electronics covers.
3. Remove the 4 screws and both of the electronics covers from the unit. (Figure 23)
- **! NOTE:** Use caution when removing the electronics cover, to prevent strain on the connector wire attached to it.
4. Remove the cable clamp, to allow for the assembly to be lifted out to better access the components.
5. Holding the assembly at either end of the LED light strip, on the primary end, gently lift the electronics assembly out of the unit (Figure 23).
- **! NOTE:** There are several wires that run between the two sides, these wires will need to be gently removed through the opening on the secondary side to allow the primary electronics assembly to be lifted out.
6. Locate the 2 screws that secure the element assembly (element and brackets) to the unit and remove.
7. Lift the element assembly out of the unit.
8. Disconnect the element from the main control board.
9. Remove the element from the mounting bracket and install the new element.
10. Attach the new element to the main control board.
11. Install and secure the element assembly into the unit.
12. Replace all of the wiring to their original locations and reinsert the electronics assembly.
- **CAUTION:** Ensure that the switchboard and terminal block have not moved from their original locations and all wires are contained under the cover before reassembly.
13. Re-assemble the remainder of the cassette in reverse order from the instructions above.

Level Sensor Assembly Replacement

Tools Required: Phillips head screwdriver

- **WARNING:** Disconnect power before attempting any maintenance to reduce the risk of electric shock or damage to persons.
- **! NOTE:** Ensure that all of the components that contain water have been emptied and source water has been turned off before performing any maintenance.

Primary Side

1. Disconnect and remove the media tray or log set from the unit and put them in a safe place.
2. Remove the securing screws and metal wire cover at the end of both of the electronics covers.
3. Remove the 4 screws and both of the electronics covers from the unit. (Figure 23)
- **! NOTE:** Use caution when removing the electronics cover, to prevent strain on the connector wire attached to it.
4. Remove the cable clamp, to allow for the assembly to be lifted out to better access the components.
5. Holding the assembly at either end of the LED light-strip, on the primary end, gently lift the electronics assembly out of the unit (Figure 23).
- **! NOTE:** There are several wires that run between the two sides, these wires will need to be gently removed through the opening on the secondary side to allow the primary electronics assembly to be lifted out.
6. Remove the refill bottle, top cover, transducer and sump.
7. Locate the level sensor assembly. (Figure 25)
8. Trace and disconnect the control wire for the level sensor assembly back to the main control board.
9. Depress the two tabs along the one side of the assembly and slide the level sensor and wire out.
10. Run new wire through to main control board.
11. Install new level sensor.
12. Reconnect the control wire.
- **CAUTION:** Ensure that the switchboard and terminal block have not moved from their original locations and all wires are contained under the cover before reassembly.
13. Re-assemble the remainder of the cassette in reverse order from the instructions above.

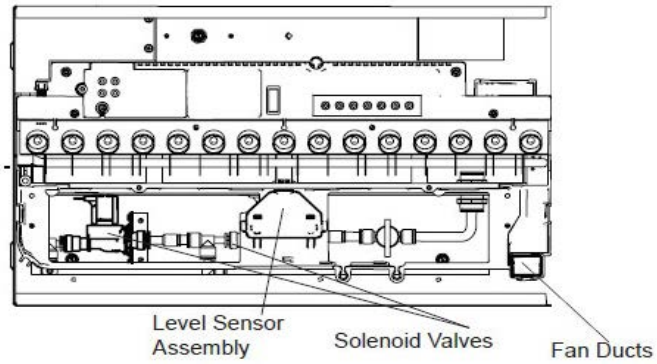

Figure 25

Solenoid Valve Replacement

Tools Required: Short Phillips head screwdriver

- **WARNING:** Disconnect power before attempting any maintenance to reduce the risk of electric shock or damage to persons.
- **! NOTE:** Ensure that all of the components that contain water have been emptied and source water has been turned off before performing any maintenance.

Primary Side

1. Disconnect and remove the media tray or log set from the unit and put them in a safe place.
2. Remove the securing screws and metal wire cover at the end of both of the electronics covers.
3. Remove the 4 screws and both of the electronics covers from the unit. (Figure 23)
- **! NOTE:** Use caution when removing the electronics cover, to prevent strain on the connector wire attached to it.
4. Remove the cable clamp, to allow for the assembly to be lifted out to better access the components.
5. Holding the assembly at either end of the LED light strip, on the primary end, gently lift the electronics assembly out of the unit (Figure 23).
- **! NOTE:** There are several wires that run between the two sides, these wires will need

to be gently removed through the opening on the secondary side to allow the primary electronics assembly to be lifted out.

6. Remove the refill bottle, top cover, transducer and sump.
7. Locate the solenoid valve to be replaced. (Figure 25).
8. Trace and disconnect the control wire for the solenoid back to the main control board.
9. Remove the two screws from the front face of the bracket to release the valve.
10. Disconnect the plumbing connections and remove the solenoid valve.
11. Run new wire through to main control board.
12. Install new solenoid valve.
13. Reconnect the control wire.

- **CAUTION:** Ensure that the switchboard and terminal block have not moved from their original locations and all wires are contained under the cover before reassembly. Re-assemble the remainder of the cassette in reverse order from the instructions above.

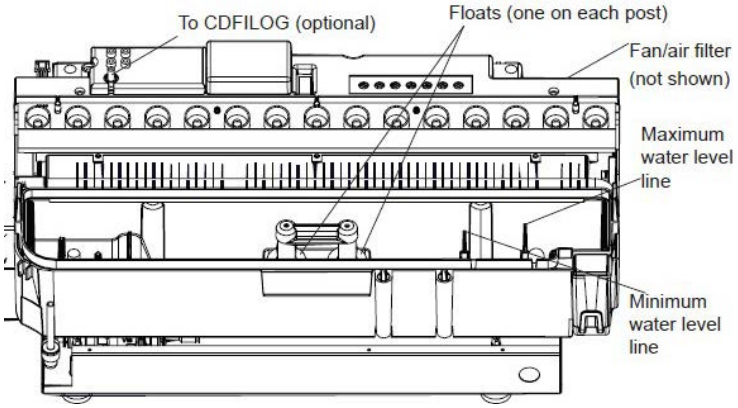

Figure 26

Troubleshooting Guide

*Before you begin consulting the troubleshooting guide, see Figure 8 to ensure the unit is ready for operation. The water level must be between the minimum and maximum water level lines, and the tethered controller must be correctly plugged in (red light on tethered controller will illuminate when cassette is powered on). When turning the unit on, ensure that both the power switch has been turned to the ON (**I**) position and that the standby button has been pressed.*

SECTION	PROBLEM	CAUSE	SOLUTION
1.0	**General**		
1.1	Fireplace does not turn on manually (unit does not beep when switch is engaged)	No incoming voltage	Check Fuse/Breaker Panel
			If multiple units are installed on the same circuit, ensure they are wired in parallel.
		Defective main control board	Replace main control board
		Defective electronic choke (primary side)	Replace electronic choke
		Defective power supply (unit may beep repeatedly to indicate error)	Replace power supply
		Defective fuse - typically due to insufficient air intakes	Correct air intake issues, and replace fused wire harness.
1.2	Only one side of the unit is operating	Tethered controller not installed correctly	Ensure that connection has clicked into place and red light is visible. If there is no light, replace tether.
		No power when standby button is pressed	Refer to section 1.1 for the secondary side
1.3	Fireplace does not turn on with the Remote Control	Improper operation	Refer to Operation Section
		The batteries in the remote control are dead (blue light on end of remote does not turn on when buttons are pressed)	Install new battery into the remote control
		Tethered controller not installed correctly	Ensure that connection has clicked into place and red light is visible.
		Remote not synchronized with the unit	Synchronize remote to unit. Unit will flash on and off during synchronization, completion will be indicated with 4 beeps
		Remote signal is not being received by tethered controller	Ensure that tethered controller is in an open area that can receive signal from remote control
		Defective remote control (blue light on end of remote does not turn on when buttons are pressed)	Replace remote control
1.4	LED lights not turning on	Defective LED light strip	Replace LED light strip
		LED driver defective (PRO MOD C+)	Replace LED driver
		LED driver not connected (PRO MOD C+)	If lights are not turning on after main control board replacement, ensure LED driver has been installed correctly (attached to main control board)
1.5	Noise when unit is on standby	Some buzzing is normal	If there is excessive noise, replace power supply
1.6	Unpleasant smell when unit is used.	Dirty or stale water.	Clean the unit as described under Maintenance.
1.7	Water is appearing around the unit	During normal operation it is expected to see some condensation of water on the media tray.	If condensation is present ensure that mist outlets are unobstructed
			Certain ambient conditions will cause condensation on the unit and in most cases will only occur on initial start up of the unit
			If there is excessive water, refer to section 4.1

Troubleshooting Guide

SECTION	PROBLEM	CAUSE	SOLUTION
2.0	**Blinking (error codes)**		
After the unit has shut down due to an error, a power cycle of the unit will be required by turning the unit off with the power switch for 10 seconds then turning back on. If the LEDs are off, press the standby button to turn on the flame effect.			
2.1	Unit continuously blinks one time	Water level in the sump is too high	Remove enough water from reservoir so that level is below maximum level.
			If the problem persists, see section 4.5
2.2	Unit continuously blinks twice	Water level in the sump is too low	Refill the water reservoir so that level is above the minimum level
			If the problem persists, see section 3.7 if using bottles or section 4.3 if using direct water line
2.3	Unit continuously blinks three times	Defective level sensor assembly	Replace level sensor assembly
2.4	Unit continuously blinks four times	Water is refilling too slowly	Power cycle the unit
			If problem persists, clean water filter and inspect plumbing to make sure pressure is adequate and nothing is obstructing water flow.
3.0	**Flame**		
3.1	The flame effect has too much smoke or is coming out too fast	Normal operation	The flame may appear overly cloudy at startup. Allow 10 minutes for flame to stabilize
		Flame effect control is set too high	Adjust the flame height on both the secondary and/or primary controls
		Filter is missing off of fan housing	Insert fan filter
3.2	Mist is not coming out evenly	The top cover is positioned incorrectly	Ensure the tabs on each side are snapped into place
		Mineral buildup on the mist outlet	Perform maintenance cleaning
		Unit is not level	Adjust the feet under the unit to ensure that the unit has been installed level, front to back and side to side
		Media is blocking air flow	Rearrange media to ensure mist outlet is not being blocked
		The transducer is not operating correctly - put the unit in test mode to test the transducer	If the transducer is running, ensure that the emitter is clean and free of calcium deposits or scaling
			If the transducer is not running, replace the transducer with the provided additional transducer
		If using demineralized water, unit will not produce a consistent mist	Add 1/8 tsp of table salt to water reservoir to introduce electrolytes, only repeat when mist is not being produced correctly
		Water in unit is too cold	Allow water to warm to room temperature.
3.3	The flame effect is too low	Flame effect control is set too low	Adjust the flame height on both the secondary and/or primary controls
		Insufficient air intake	Enlarge area for air to enter unit in such a way that it will reach the bottom. Refer to to installation guide for requirements.
		Transducer is defective	Replace transducer
		Cord is located over emitter on transducer	Relocate cord so that mist is free to rise off of transducer
		Transducer is installed incorrectly	Ensure that the transducer is seated correctly
		Flame is not rising	Refer to section 3.2 to 3.5
3.4	Flame appears to be rolling back into the unit	Insufficient air intake	Enlarge area for air to enter unit in such a way that it will reach the bottom. Refer to to installation guide for requirements.
		The heating element is not operating correctly- put unit in test mode to test the operation of the heating element	If no click is heard from the relay, replace the main board
			If a click can be heard, but the element does not get warm, replace the heating element

Troubleshooting Guide

SECTION	PROBLEM	CAUSE	SOLUTION
3.0	**Flame (continued)**		
3.5	Mist is being produced under the top cover, but does not rise to create a flame effect	Water in fan duct	Ensure there is no water in the duct that blows air up to the flame
		Fan is not operating correctly - put unit in test mode to test the fan	Ensure fan filter is clean and dry
			If fan is not working in test mode, replace fan. If issue persists, replace main board
3.6	Flame effect will not start, no error blinks	Normal operation	Mist will begin emitting out of the unit after 45 seconds of operation
		Flame is being produced, but is not rising beyong the top cover.	Carefully lift the top cover while the unit is operating. If mist is produced but is not rising, refer to section 3.5.
		The transducer is not connected	Ensure the transducer is firmly connected
		The transducer is not operating correctly - put the unit in test mode to test the transducer	If the transducer is running, ensure that the emitter is clean and free of calcium deposits or scaling
			If the transducer is not running, replace the transducer with the provided additional transducer
3.7	Flame colors of new units do not match	MOD C equipped with yellow LEDs, MOD 0-B equipped with orange LEDs	Replace orange LEDs and add LED driver board (9601270300RP) to main control board (1 each for CDFI500-PRO, 2 each for CDFI1000-PRO)
4.0	**Water Supply**		
4.1	Sump is not filling- ***refill bottle***	Bottle is tilting away from fill cap	Ensure unit is level. Place under the botle to slope it slightly toward the fill cap so that the water can easily flow to the water reservoir
4.2	Sump is overfilling - refill bottle	Bottlle or bottle cap is leaking	Inspect the bottle and cap for damage and replace if necessary.
4.3	Water is appearing beneath unit	Connections are leaking	Ensure that all water connections are tight and fully inserted
		Incoming water pressure is too high	Reduce water pressure to below 58 psi (8 bar)
4.4	Unit is underfilling or not filling (hard plumbed to water source)	Unit is not level	Ensure that unit is level to allow an accurate reading of water level
		Valve not open	Ensure that the ball valve of the unit is open, and that water is getting to the unit
		Missing floats	Inspect sump to ensure floats are installed
		Defective level sensor assembly	Replace level sensor assembly
		The solenoids are not operating correctly - put unit in test mode to test the operation of the solenoids	If the solenoids are not working, replace the solenoid
4.5	Unit is not refilling and is not giving error blinks when water is too high or too low	Defective level sensor assembly	Replace level sensor assembly
4.6	Sump is overfillling.	Plumbing cap is leaking when orange cap is removed, indicating a defective solenoid	Can try flushing the solenoid by connecting water line in the opposite direction
			Replace solenoid
For additional troubleshooting relating to the CDFI-BX Pro-Box, refer to its service manual.			

Test Mode

Test Mode has been integrated into this product to improve end-of-line testing during production and can be used to isolate components for individual function testing. Test mode should be conducted by trained personnel only. The icons on the On Board Control buttons (Page 33 - Figure 20) do not match the commands they are associated with, when in test mode.

1. Ensure unit is connected to power and water is supplied.
2. Remove logs or top plate and set aside.
3. Press power switch on (Page 33 - Figure 20: A). Presence of power will be indicated by one beep.
4. Press the troubleshooting button (Page 33 - Figure 20: D) on the side that the testing is required, unit will beep.
5. Press the following buttons to test functionality of listed components - press once to turn On and press again to turn off.

	Component Test	Expected Functionality
	LED Assembly / LED Driver	Lights turn on
	Sound	Crackling sound turns on
	Fan	Fan turns on
	Transducer	Transducer will turns on and bubbling will be seen coming out of the transducer
	Solenoids	Solenoids will turn On (the main solenoid coming in and the solenoid on the side being tested). The sound of the solenoids can be heard (a slight thump), and possibly the sound of water flowing.
	Heater Relay	Relays will be activated to turn the heating element on, a quiet clicking noise can be heard. The element will get warm.
	Log Set	LEDs in log set will turn on (if present)

6. After 15 seconds of inactivity the unit will beep and then return to regular Standby mode, or the On/Off button can be switched to Off to end the test mode.

REV	PCN	DATE
00	-	21-12-15
01	-	31-07-19
02	-	07-10-19
03	-	08-07-20
04	-	04-29-21
05	ECO-000335	07-12-21

CF + D | custom fireplace design
5230 Harvester Rd. Unit #2 Burlington, Ontario Canada
L7L 4X4 t. 1-866-909-3070 t. 905-681-3070
www.customfireplacedesign.com