VITA | Fireplaces

North American Designed & Manufactured by **CF + D** | custom fireplace design

Image shown is for illustration purpose and may include some optional features.

AIDAN Single-Sided | Suspended Gas Fireplace

Fireplaces have been tested and proved to comply with ANSI Z21.50/CSA 2.22 Vented Gas Fireplace. Certified under: ICC-ES PMG-1290

PRODUCT LAYOUT PACKAGE

(VERTICAL TERMINATION)

2020-06-15

CF + D | custom fireplace design

www.customfireplacedesign.com

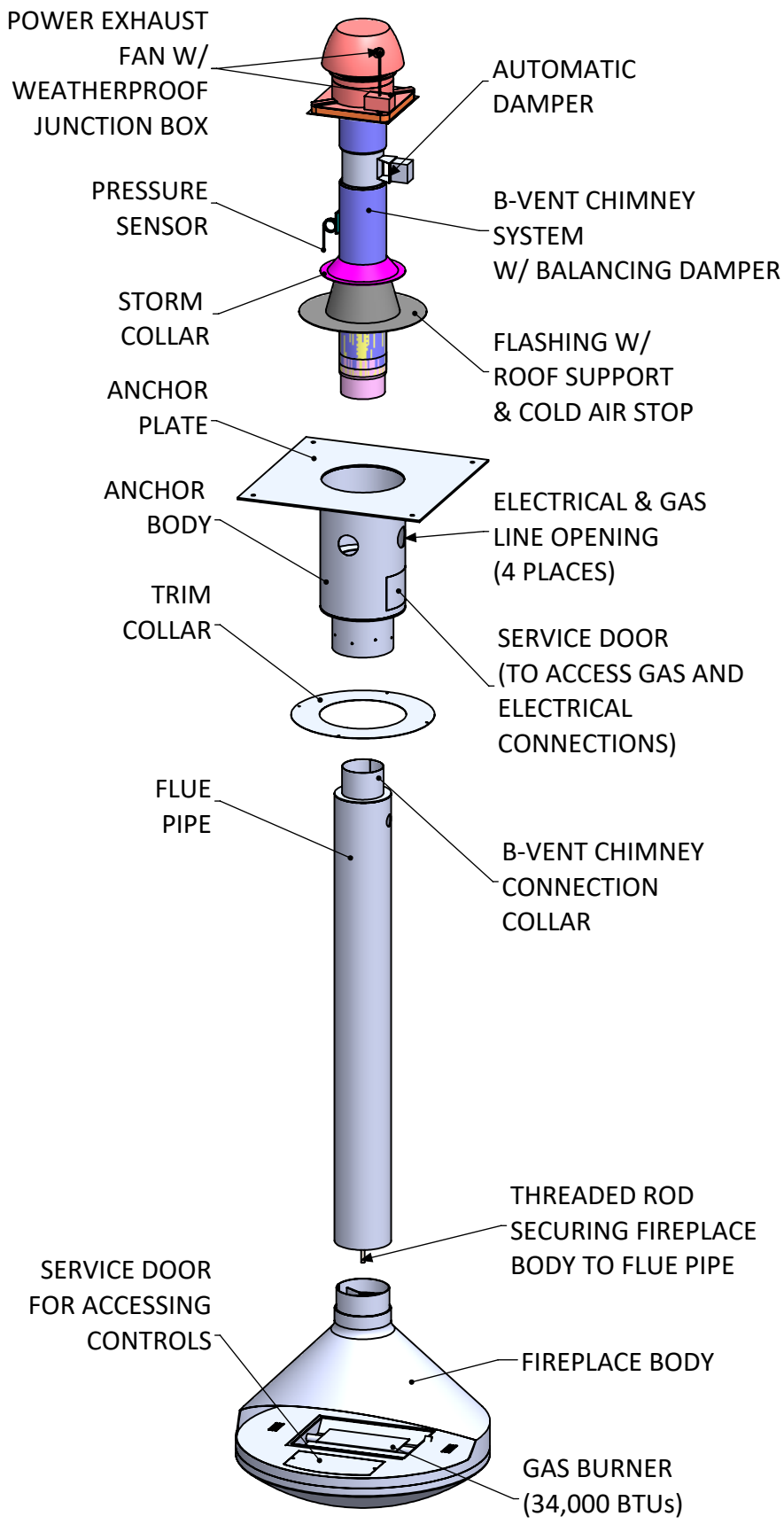

EXPLODED VIEW

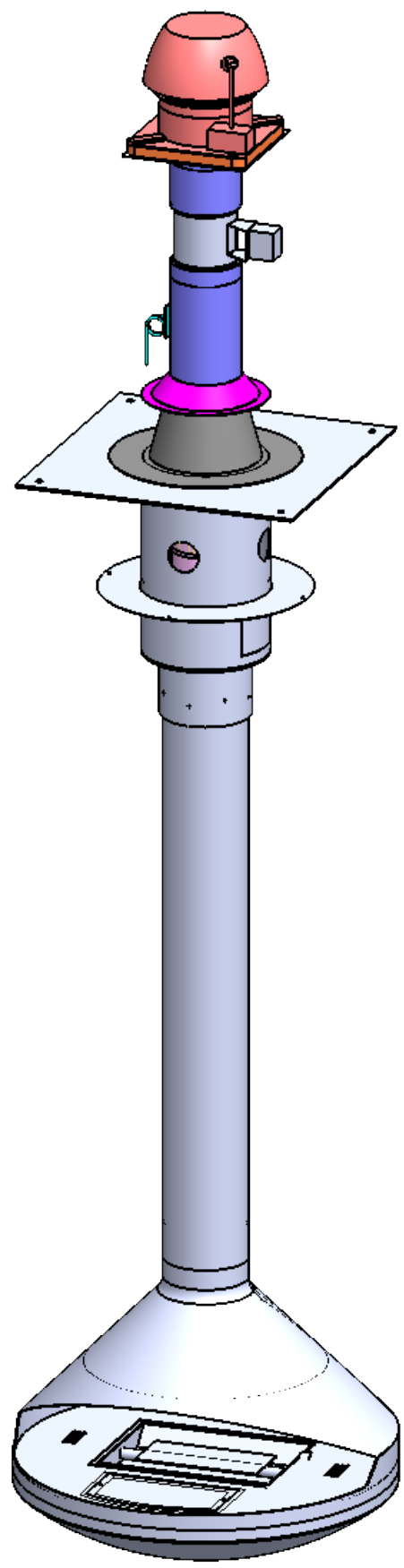

ASSEMBLY VIEW

AIDAN Single-Sided | Suspended Gas Fireplace

Product Information

- Fireplaces have been tested and proved to comply with ANSI Z21.50/CSA 2.22 Vented Gas Fireplace. Certified under: ICC-ES PMG-1290.
- Natural Gas or Propane fueled.
- Natural Gas Burner: approx. 34,000 BTUs.
- Propane Burner: approx. 37,000 BTUs.
- 120 Volt 15 Amp required for venting.
- Gas & Electrical connections to be completed on-site at service door.
- 6" ID B-Vent chimney system required.
- All standard fireplaces painted in factory Flat Black finish. Custom Client finishes are available by request. Sample required.
- Dedicated wall switch required for operation.
- All dimensions are in inches.
- Exact measurements may vary ± 1/4".
- Optional decorative chimney cover available at add'l cost.
- Custom anchor options available at add'l cost.
- Enervex Intelli Draft and Damper System.
- 250CFM of make-up air recommended.
- The height of the chimney vent must extend a minimum of 2 ft. above the roof exit.

STANDARD PRODUCT WEIGHTS

SR. NO.	COMPONENT REFERENCE	WEIGHT
1	ANCHOR (∅ 12" x 24" Long)	85 lbs. approx.
2	FLUE (∅ 8" x 67" Long)	60 lbs. approx.
3	FIREPLACE BODY	165 lbs. approx.
TOTAL FIREPLACE WEIGHT (FOR 9 FT. CEILING APPLICATION)		310 lbs. approx.

*Each add'l. 1 ft. of flue pipe weighs : approx. 11 lbs.
*Each add'l. 1 ft. of anchor pipe weighs : approx. 17 lbs.

North American Designed & Manufactured by:

CF + D
custom fireplace design

5230 Harvester Rd. Unit # 2 Burlington, Ontario Canada L7L 4X4
Phone: 905 681-3070 Fax: 905 681-8697

PROPRIETARY AND CONFIDENTIAL
THE INFORMATION CONTAINED IN THIS DRAWING IS THE SOLE PROPERTY OF CUSTOM FIREPLACE DESIGN. ANY REPRODUCTION IN PART OR AS A WHOLE WITHOUT THE WRITTEN PERMISSION OF CUSTOM FIREPLACE DESIGN IS PROHIBITED.

PROJECT: AIDAN Single-Sided | Suspended Gas Fireplace
REV: 0

UNLESS OTHERWISE SPECIFIED
DIMENSIONS ARE IN INCHES
TOLERANCES:
FRACTIONAL ± 1/16
ANGULAR: MACH ± 1° BEND ±0.5°
TWO PLACE DECIMAL ± 0.01
THREE PLACE DECIMAL ± 0.005

DESCRIPTION: Assembly View

	NAME	DATE (mm/dd/yyyy)
DRAWN	mpanchal	2020-06-15
CHECKED	MV	2020-06-15
APPROVED	--	NA

SIZE B SHEET 2 OF 7 DO NOT SCALE DRAWING

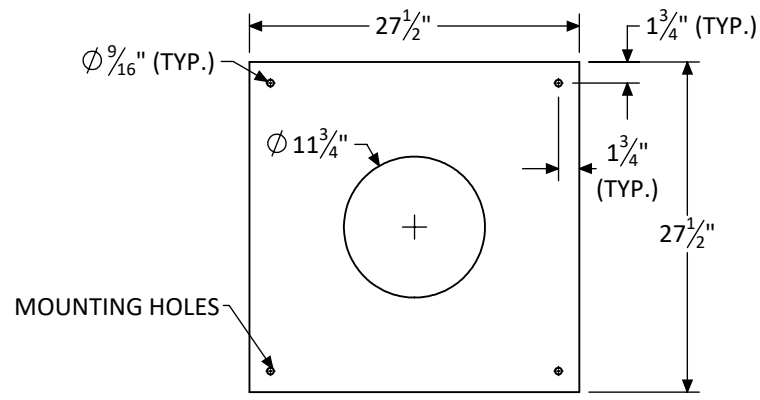

STANDARD ANCHOR PLATE- 1/4" THICK.

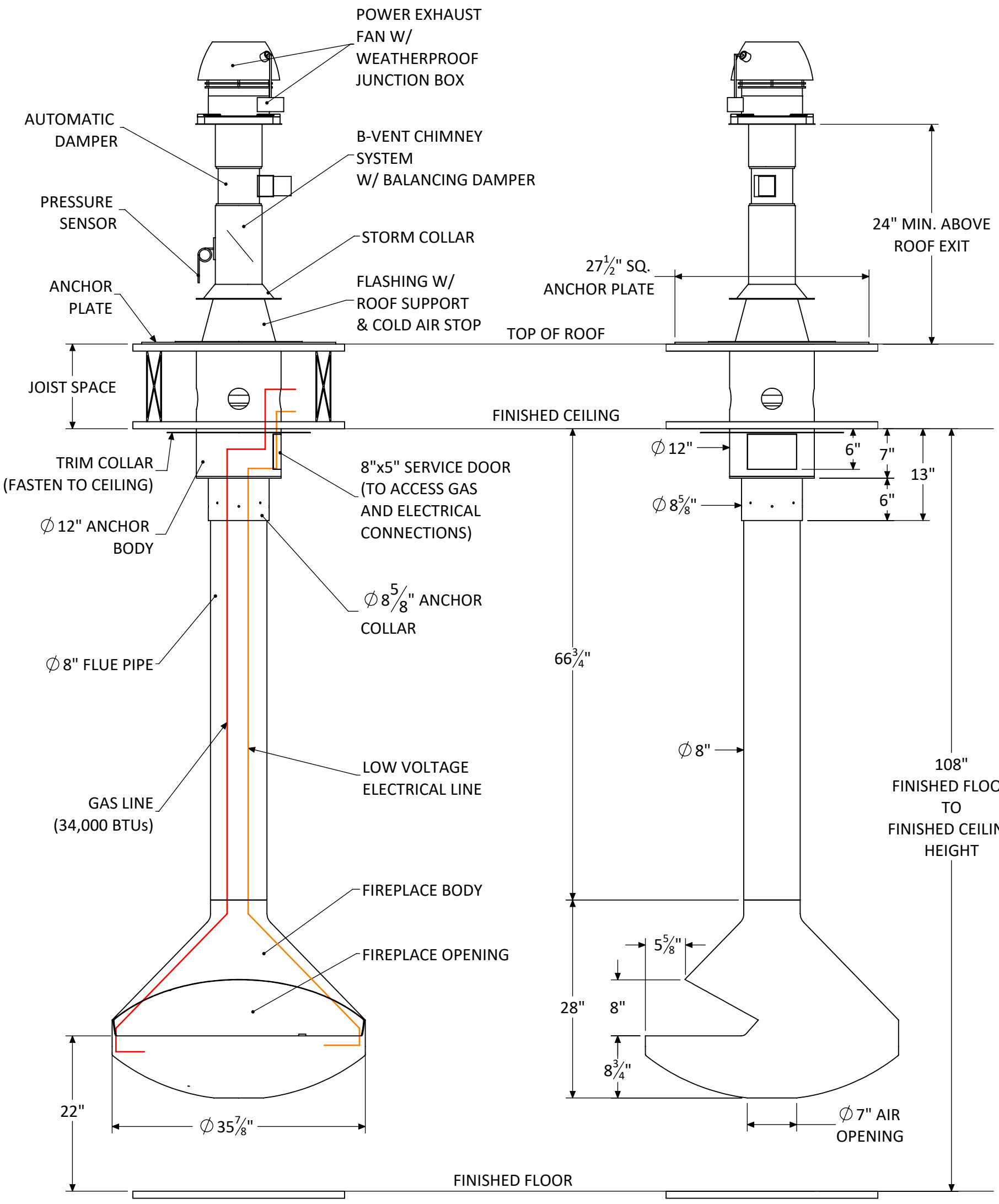

North American Designed & Manufactured by:

CF + D
custom fireplace design

5230 Harvester Rd. Unit # 2 Burlington, Ontario Canada L7L 4X4
Phone: 905 681-3070 Fax: 905 681-8697

PROPRIETARY AND CONFIDENTIAL
THE INFORMATION CONTAINED IN THIS DRAWING IS THE SOLE PROPERTY OF CUSTOM FIREPLACE DESIGN. ANY REPRODUCTION IN PART OR AS A WHOLE WITHOUT THE WRITTEN PERMISSION OF CUSTOM FIREPLACE DESIGN IS PROHIBITED.

PROJECT
AIDAN Single-Sided | Suspended Gas Fireplace

REV 0

UNLESS OTHERWISE SPECIFIED
DIMENSIONS ARE IN INCHES
TOLERANCES:
FRACTIONAL ± 1/16
ANGULAR: MACH ± 1° BEND ±0.5°
TWO PLACE DECIMAL ± 0.01
THREE PLACE DECIMAL ± 0.005

DESCRIPTION
Specifications

	NAME	DATE (mm/dd/yyyy)
DRAWN	mpanchal	2020-06-15
CHECKED	MV	2020-06-15
APPROVED	--	NA

SIZE B SHEET 3 OF 7 DO NOT SCALE DRAWING

CUSTOM ANCHOR OPTIONS AVAILABLE (PLEASE FILL IN THE BLANKS AS PER SITE SPECIFIC DETAILS)

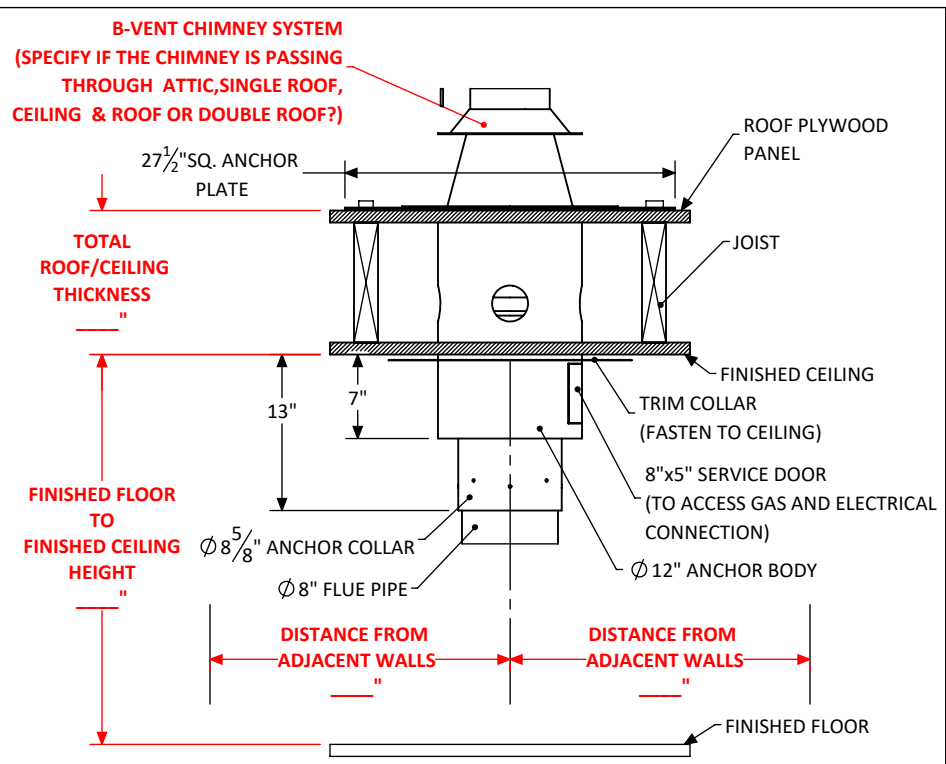

OPTION A - FLAT ROOF DROP FROM ABOVE

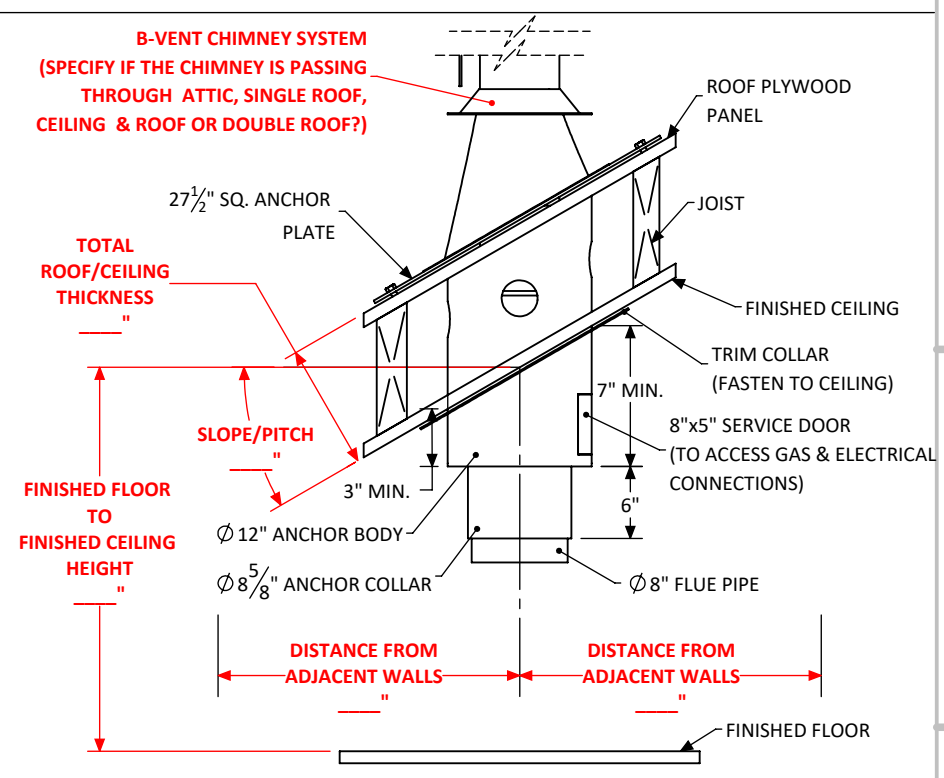

OPTION B - SLOPED DROP FROM ABOVE

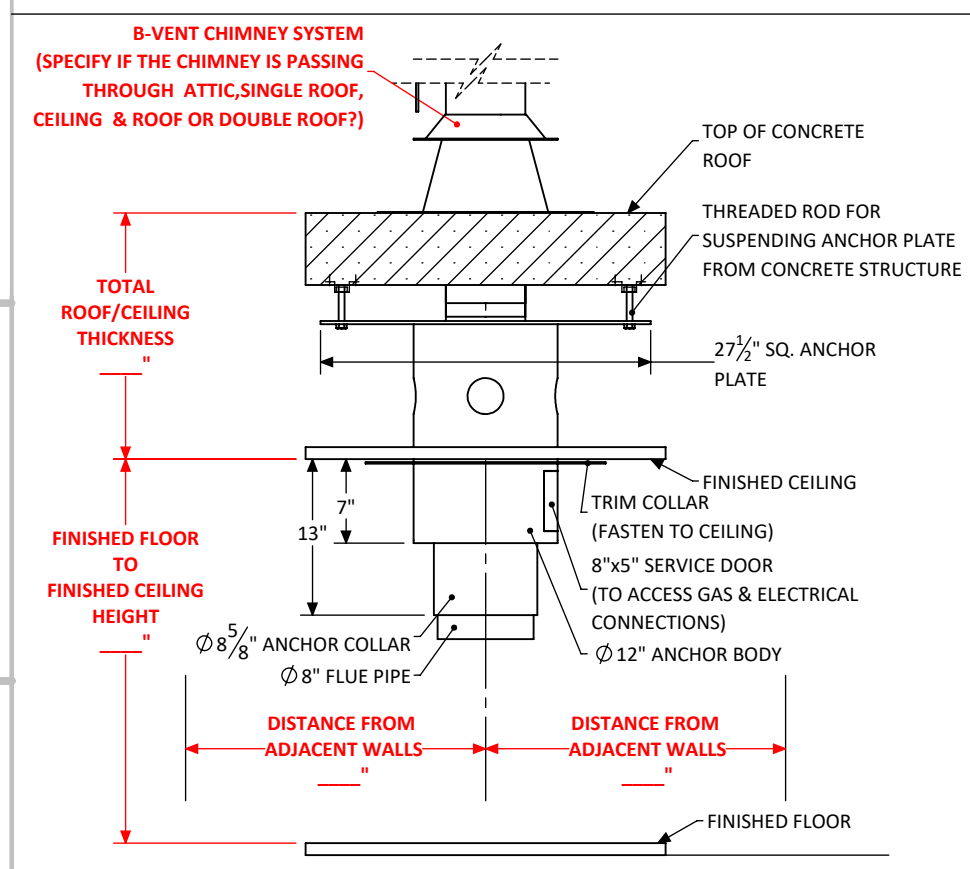

OPTION C - SUSPENDED FROM CONCRETE

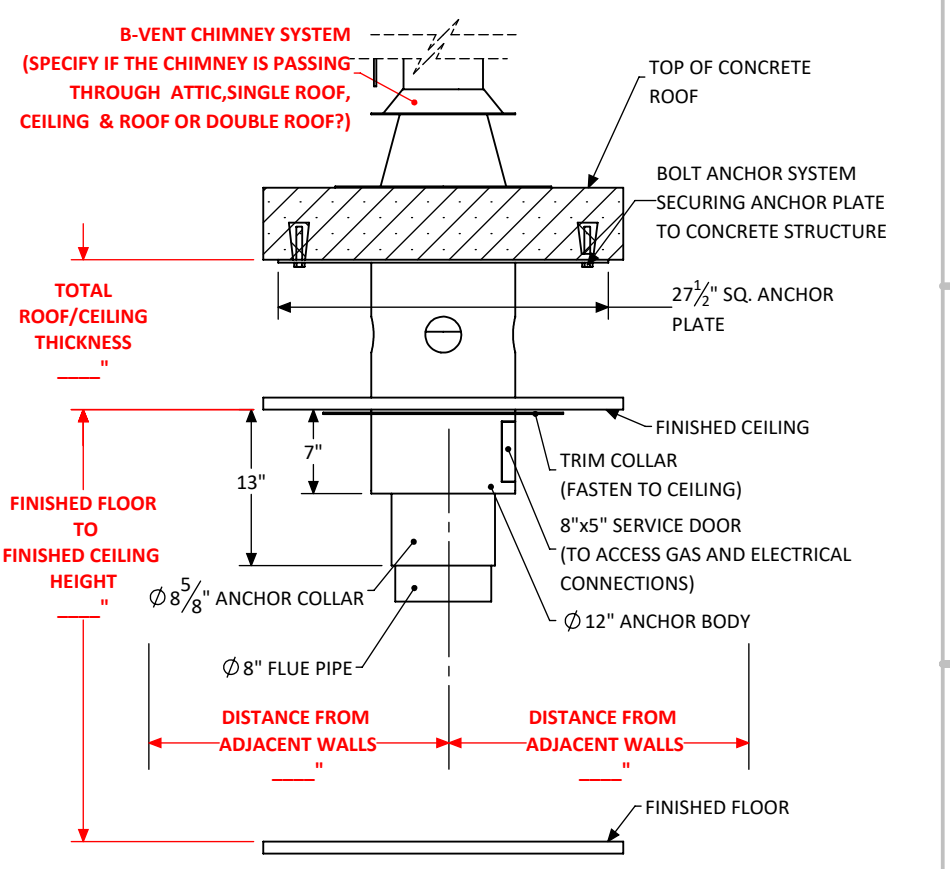

OPTION D - ATTACHED BELOW CONCRETE

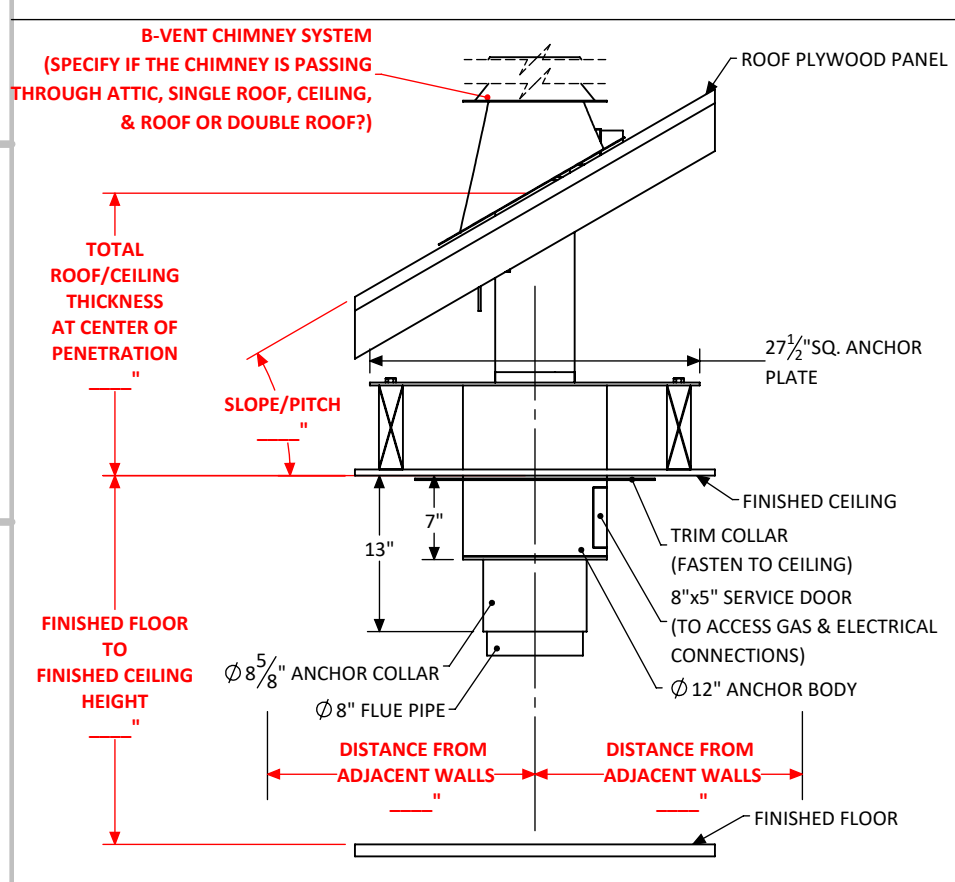

OPTION E - SLOPED ROOF FLAT CEILING ANCHOR DROPPED ON CEILING STRUCTURE

North American Designed & Manufactured by:

CF + D
custom fireplace design

5230 Harvester Rd. Unit # 2 Burlington, Ontario Canada L7L 4X4
Phone: 905 681-3070 Fax: 905 681-8697

PROPRIETARY AND CONFIDENTIAL
THE INFORMATION CONTAINED IN THIS DRAWING IS THE SOLE PROPERTY OF CUSTOM FIREPLACE DESIGN. ANY REPRODUCTION IN PART OR AS A WHOLE WITHOUT THE WRITTEN PERMISSION OF CUSTOM FIREPLACE DESIGN IS PROHIBITED.

PROJECT
AIDAN Single-Sided | Suspended Gas Fireplace

REV 0

UNLESS OTHERWISE SPECIFIED
DIMENSIONS ARE IN INCHES
TOLERANCES:
FRACTIONAL ± 1/16
ANGULAR: MACH ± 1° BEND ±0.5°
TWO PLACE DECIMAL ± 0.01
THREE PLACE DECIMAL ± 0.005

DESCRIPTION
Anchor Options

	NAME	DATE (mm/dd/yyyy)
DRAWN	pjani	2020-06-21
CHECKED	MV	2020-06-21
APPROVED	--	NA

SIZE B SHEET 4 OF 7 DO NOT SCALE DRAWING

CLEARANCE TO COMBUSTIBLES

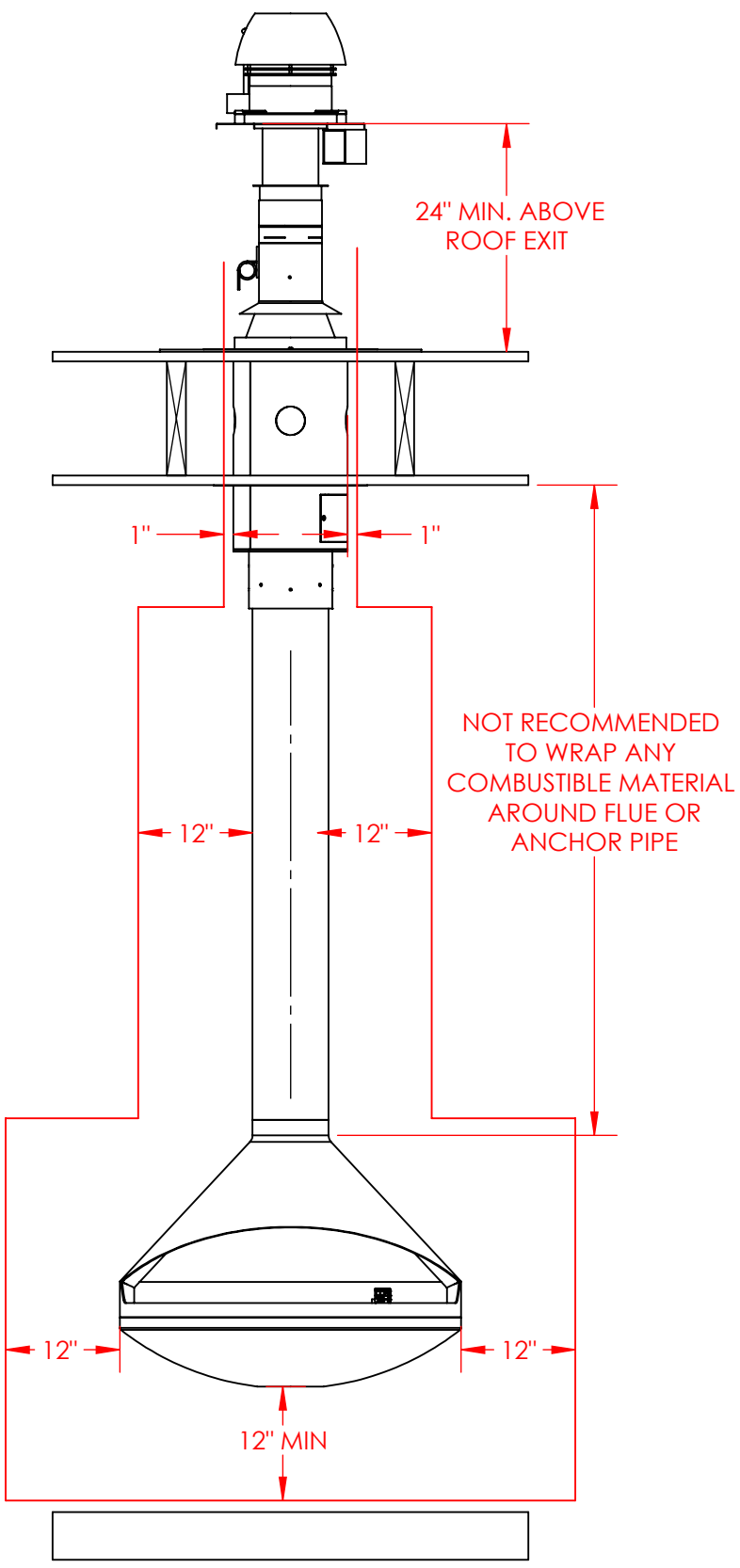

FRONT ELEVATION

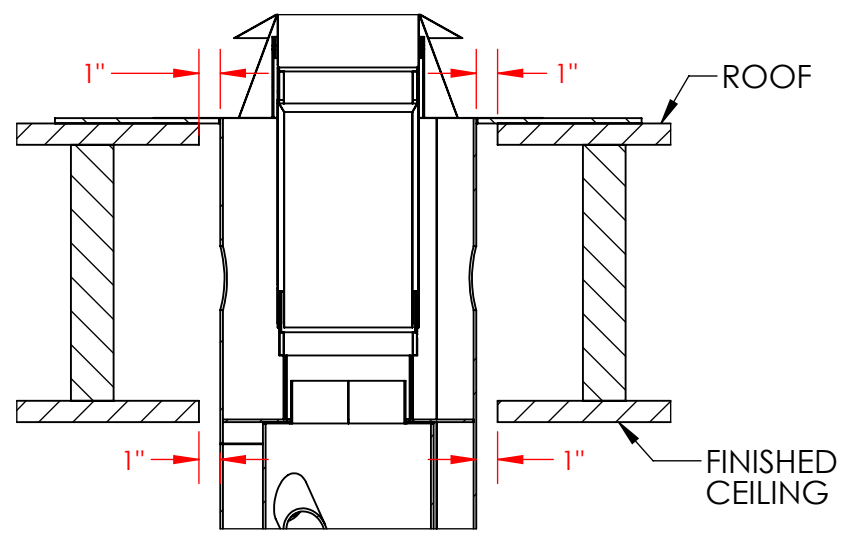

CLEARANCE TO COMBUSTIBLES
AT CEILING AND ROOF

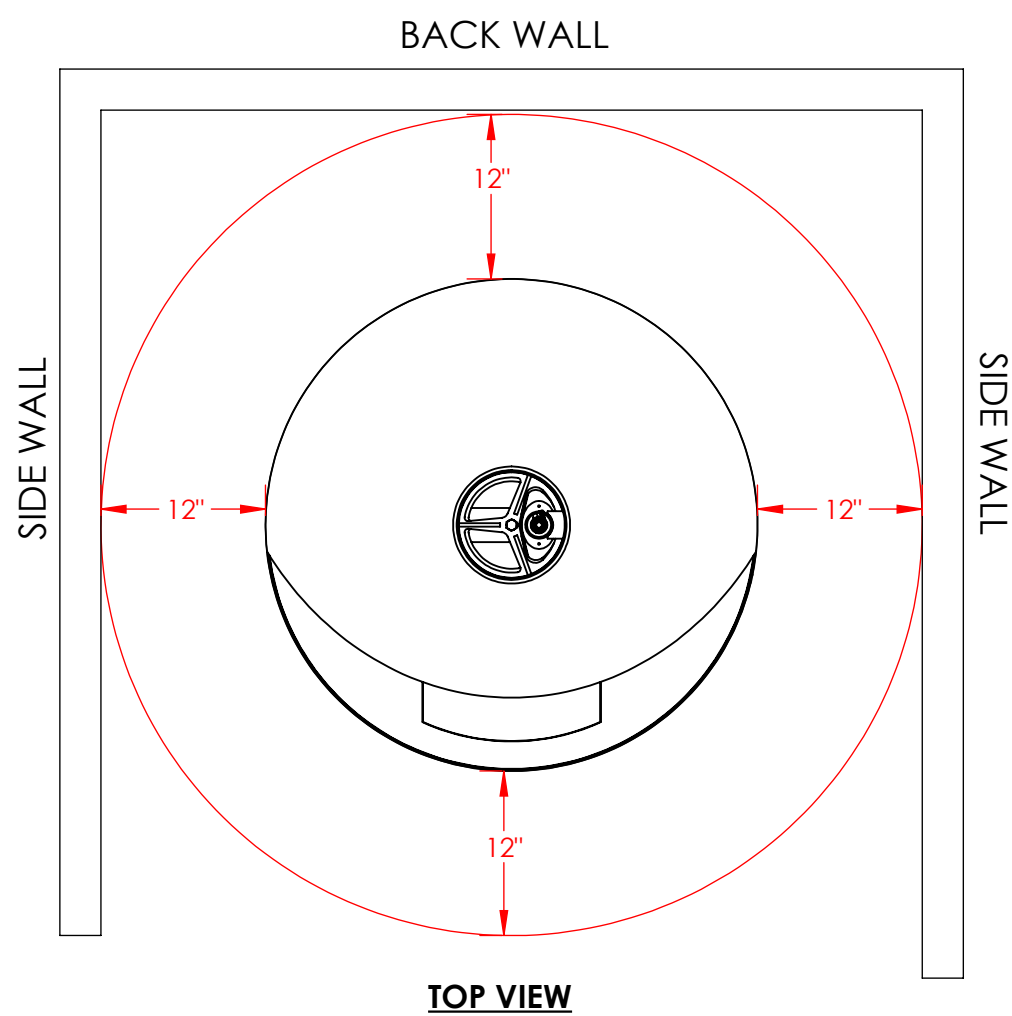

TOP VIEW

CLEARANCE TO COMBUSTIBLES
AROUND FIREPLACE BODY

CLEARANCE TO COMBUSTIBLES:

1. Minimum 12" from floor to bottom of fireplace.
2. Minimum 12" around the fireplace body and flue pipe.
3. Minimum 1" where the anchor passes through the ceiling/roof.
4. Minimum 1" around the chimney components.

North American Designed & Manufactured by:

CF + D
custom fireplace design
5230 Harvester Rd. Unit # 2 Burlington, Ontario Canada L7L 4X4
Phone: 905 681-3070 Fax: 905 681-8697

PROPRIETARY AND CONFIDENTIAL
THE INFORMATION CONTAINED IN THIS DRAWING IS THE SOLE PROPERTY OF CUSTOM FIREPLACE DESIGN.
ANY REPRODUCTION IN PART OR AS A WHOLE WITHOUT THE WRITTEN PERMISSION OF CUSTOM FIREPLACE DESIGN IS PROHIBITED.

PROJECT
AIDAN Single-Sided | Suspended Gas Fireplace

REV 0

UNLESS OTHERWISE SPECIFIED
DIMENSIONS ARE IN INCHES
TOLERANCES:
FRACTIONAL ± 1/16
ANGULAR: MACH ± 1° BEND ±0.5°
TWO PLACE DECIMAL ± 0.01
THREE PLACE DECIMAL ± 0.005

DESCRIPTION
Clearance to Combustibles

	NAME	DATE (mm/dd/yyyy)
DRAWN	mpanchal	2020-06-15
CHECKED	MV	2020-06-15
APPROVED	--	NA

SIZE B SHEET 5 OF 7 DO NOT SCALE DRAWING

TYPICAL VITA GAS ENERVEX ELECTRICAL DIAGRAM

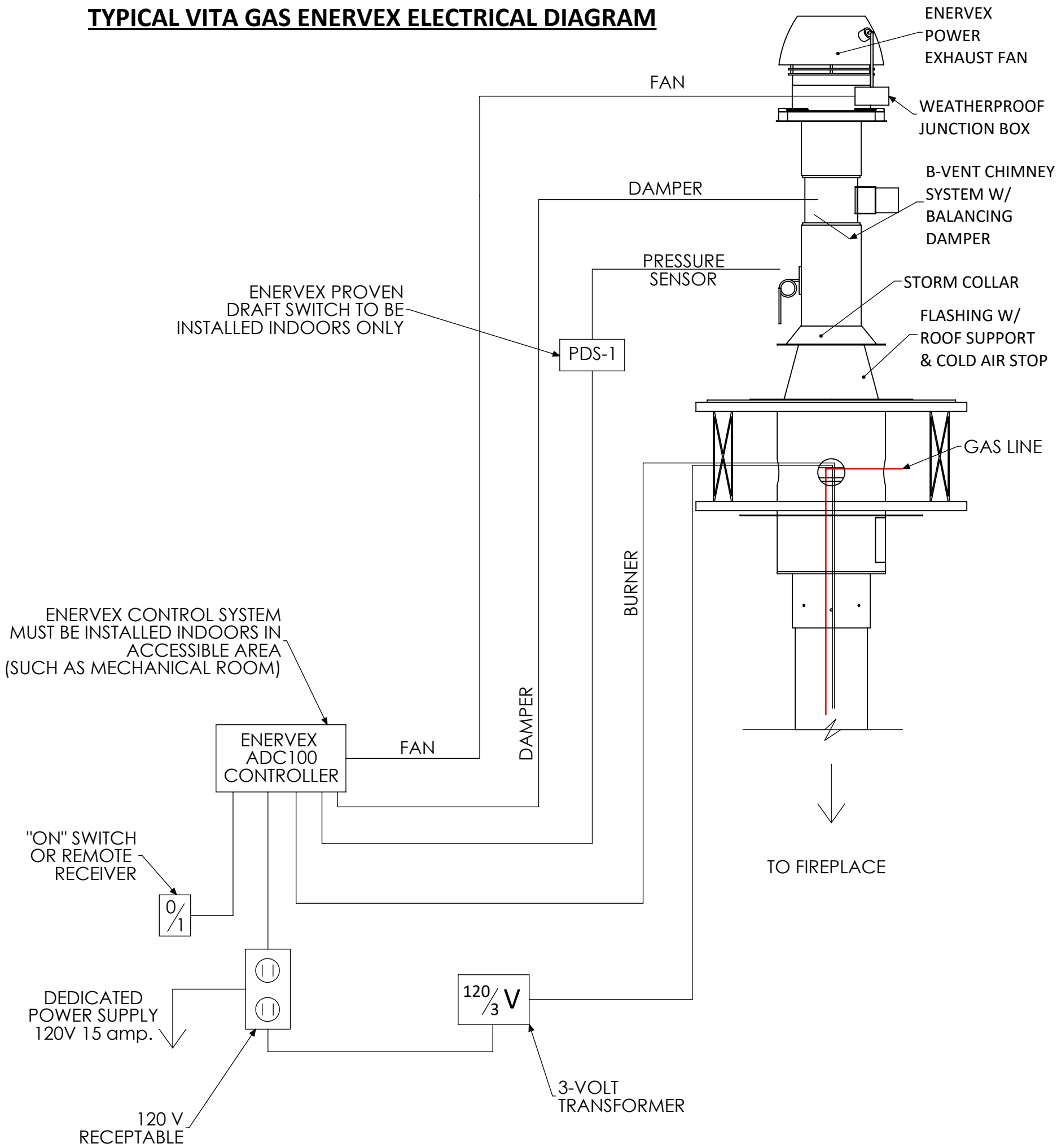

SCHEMATIC ENERVEX SYSTEM AS PER ENERVEX MANUALS/MEP REQUIREMENTS

SEE PAGE 11 OF ENERVEX ADC100 MANUAL

NOTE: Dedicated wall switch required for operation.

North American Designed & Manufactured by:

CF + D
custom fireplace design

5230 Harvester Rd. Unit # 2 Burlington, Ontario Canada L7L 4X4
Phone: 905 681-3070 Fax: 905 681-8697

PROPRIETARY AND CONFIDENTIAL
THE INFORMATION CONTAINED IN THIS DRAWING IS THE SOLE PROPERTY OF CUSTOM FIREPLACE DESIGN. ANY REPRODUCTION IN PART OR AS A WHOLE WITHOUT THE WRITTEN PERMISSION OF CUSTOM FIREPLACE DESIGN IS PROHIBITED.

PROJECT
AIDAN Single-Sided | Suspended Gas Fireplace

REV 0

UNLESS OTHERWISE SPECIFIED
DIMENSIONS ARE IN INCHES
TOLERANCES:
FRACTIONAL ± 1/16
ANGULAR: MACH ± 1° BEND ±0.5°
TWO PLACE DECIMAL ± 0.01
THREE PLACE DECIMAL ± 0.005

DESCRIPTION
Electrical Diagram

	NAME	DATE (mm/dd/yyyy)
DRAWN	mpanchal	2020-06-15
CHECKED	MV	2020-06-15
APPROVED	--	NA

SIZE B SHEET 6 OF 7 DO NOT SCALE DRAWING

OPTIONAL DECORATIVE CHIMNEY COVER (ROUND)

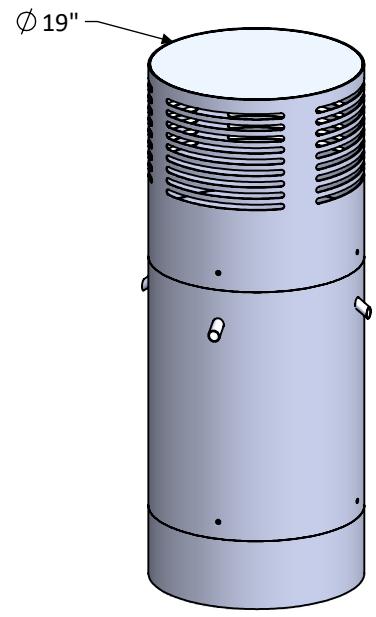

(STANDARD SIZE UP TO 5 FT.)

WITHOUT DECORATIVE CHIMNEY COVER

WITH DECORATIVE CHIMNEY COVER

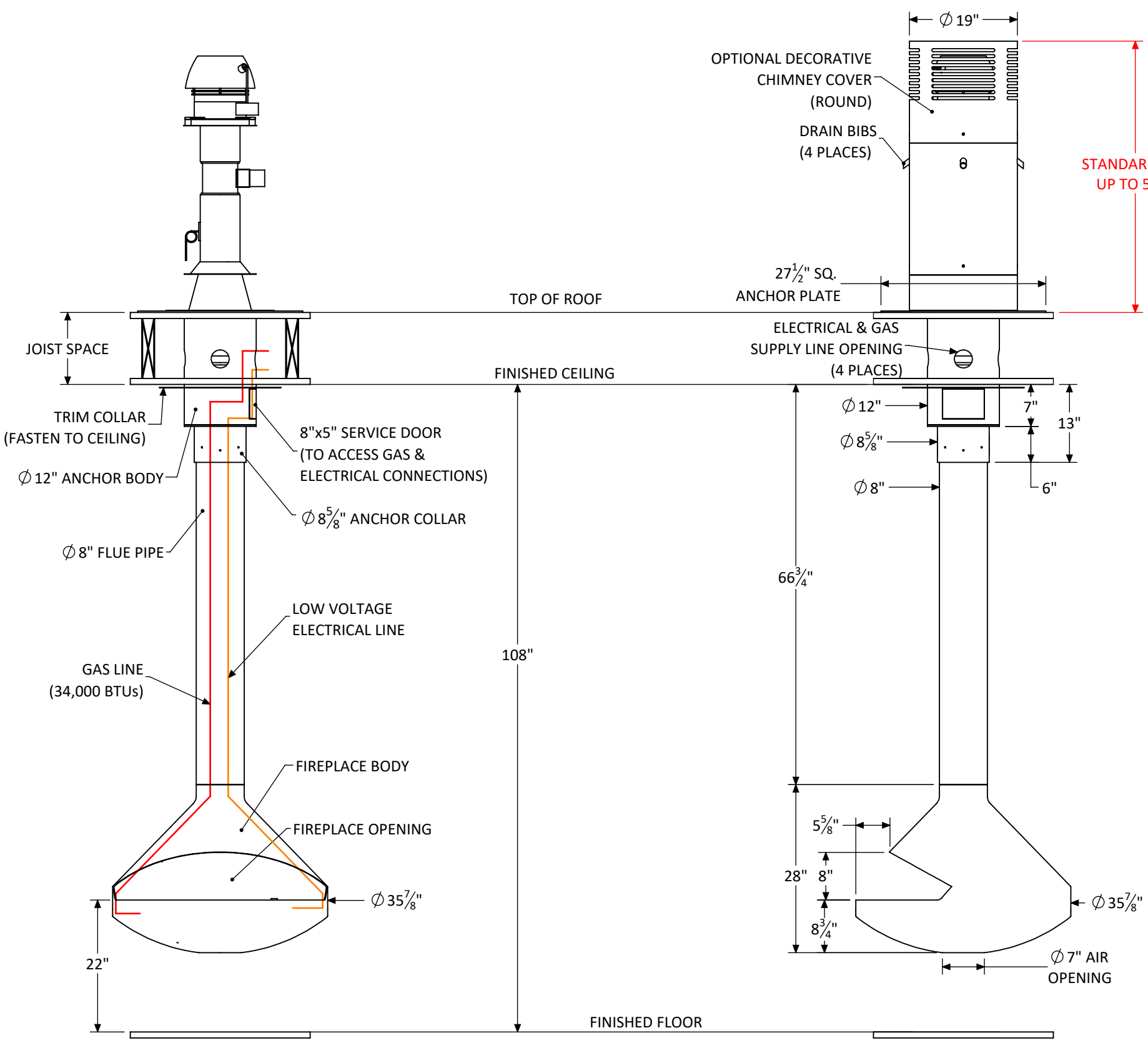

FRONT ELEVATION

SIDE ELEVATION

Shown with Standard 9 ft. Flat Ceiling Application & Gas Burner Custom Lengths & Anchor Options Available

North American Designed & Manufactured by:

CF + D
custom fireplace design

5230 Harvester Rd. Unit # 2 Burlington, Ontario Canada L7L 4X4
Phone: 905 681-3070 Fax: 905 681-8697

PROPRIETARY AND CONFIDENTIAL
THE INFORMATION CONTAINED IN THIS DRAWING IS THE SOLE PROPERTY OF CUSTOM FIREPLACE DESIGN. ANY REPRODUCTION IN PART OR AS A WHOLE WITHOUT THE WRITTEN PERMISSION OF CUSTOM FIREPLACE DESIGN IS PROHIBITED.

PROJECT
AIDAN Single-Sided | Suspended Gas Fireplace

REV 0

UNLESS OTHERWISE SPECIFIED
DIMENSIONS ARE IN INCHES
TOLERANCES:
FRACTIONAL ± 1/16
ANGULAR: MACH ± 1° BEND ±0.5°
TWO PLACE DECIMAL ± 0.01
THREE PLACE DECIMAL ± 0.005

DESCRIPTION
Decorative Cover Options

	NAME	DATE (mm/dd/yyyy)
DRAWN	mpanchal	2020-06-15
CHECKED	MV	2020-06-15
APPROVED	--	NA

SIZE B SHEET 7 OF 7 DO NOT SCALE DRAWING