VITA | Fireplaces

North American Designed & Manufactured by **CF + D** | custom fireplace design



Image shown is for illustration purpose and may include some optional features.

CALLISTA Triple-Sided | Suspended Gas Fireplace

Fireplaces have been tested and proved to comply with ANSI Z21.50/CSA 2.22
Vented Gas Fireplace. Certified under: ICC-ES PMG-1290

PRODUCT LAYOUT PACKAGE

(HORIZONTAL TERMINATION)

2020-06-17

CF + D | custom fireplace design

www.customfireplacedesign.com

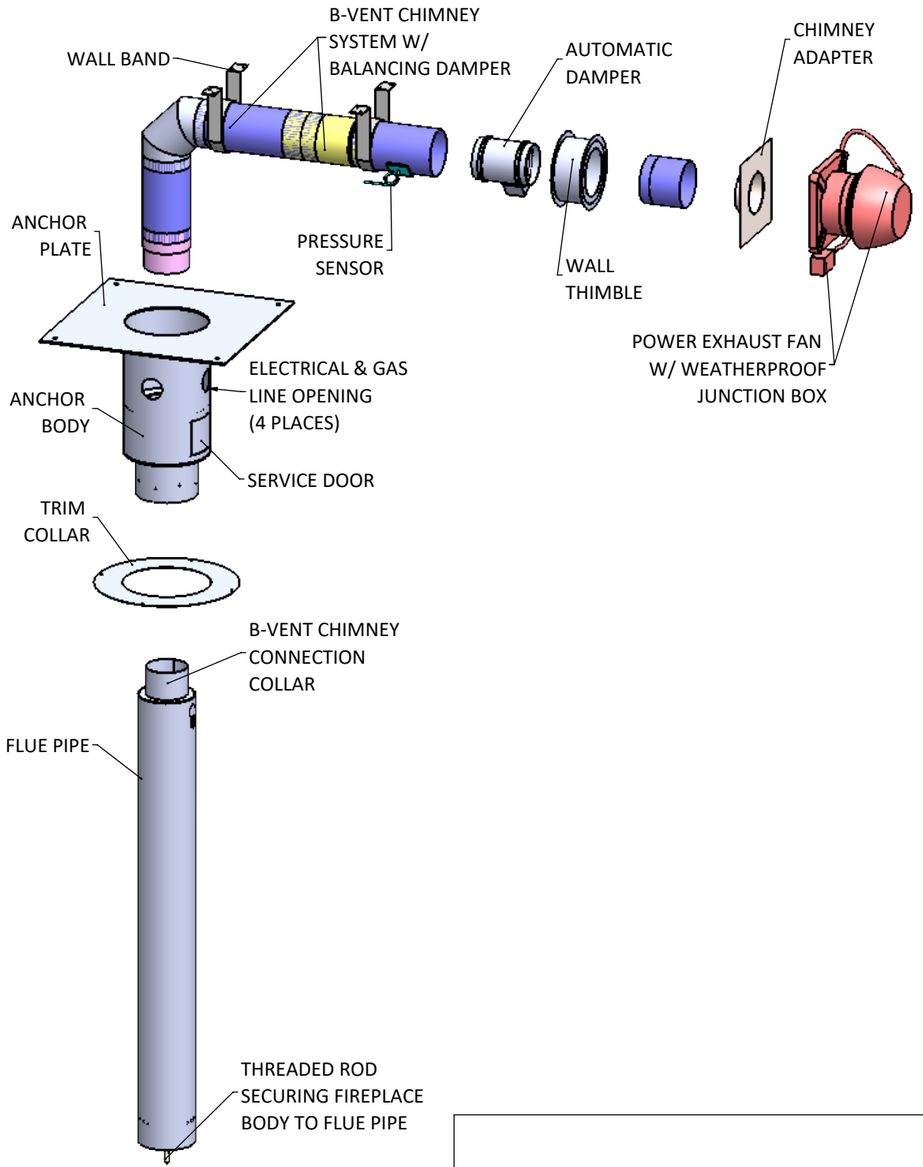

EXPLODED VIEW

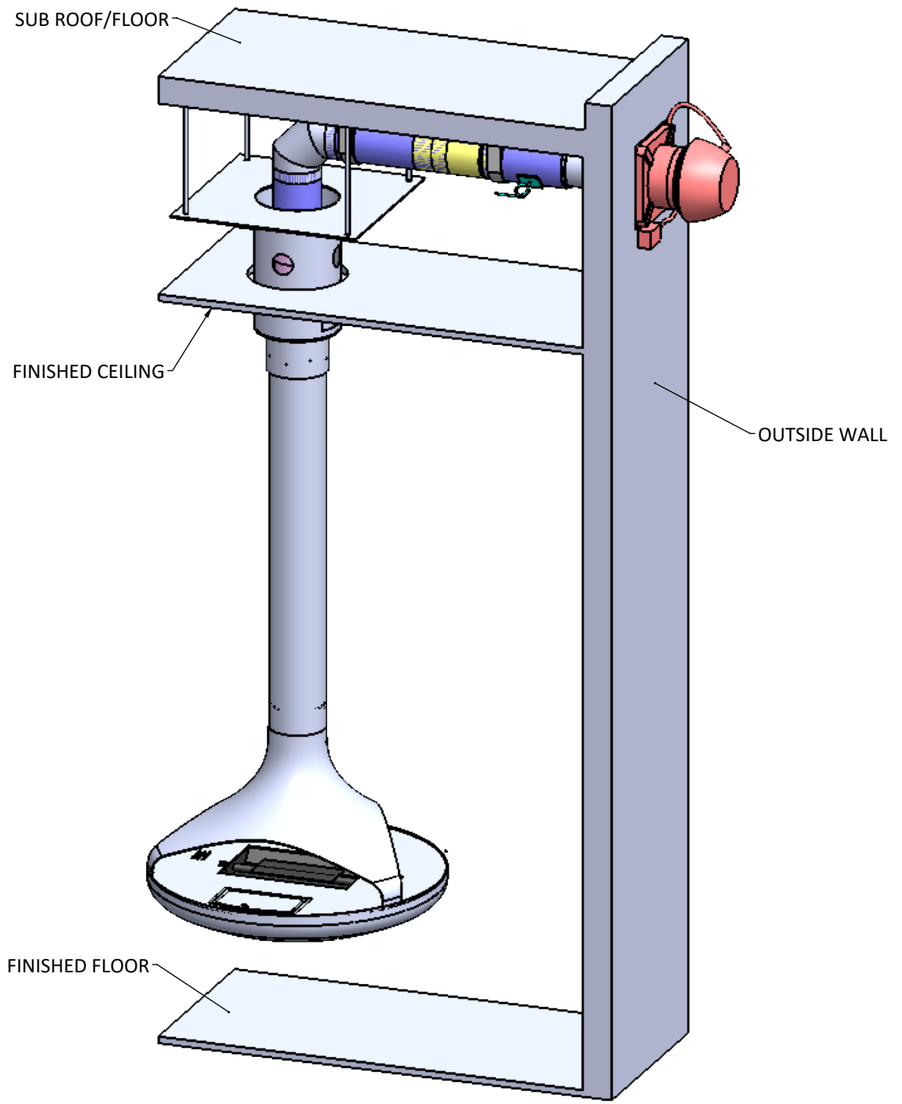

CALLISTA Triple-Sided | Suspended Gas Fireplace

Product Information

- Fireplaces have been tested and proved to comply with ANSI Z21.50/CSA 2.22 Vented Gas Fireplace.
- Certified under ICC-ES PMG-1290
- Natural Gas or Propane fueled.
- Natural Gas Burner: approx. 34,000 BTUs.
- Propane Burner: approx. 37,000 BTUs.
- 120 Volt 15 Amp required for venting.
- Gas & Electrical connection to be completed on-site at service door.
- 6" ID B-Vent chimney system required.
- All standard fireplaces painted in factory Flat Black finish.
- Custom Client finishes are available by request. Sample required.
- Dedicated wall switch required for operation.
- All dimensions are in inches.
- Exact measurements may vary ±1/4".
- Optional Decorative Chimney Cover available at add'l cost.
- Custom anchor options available at add'l cost.
- Enervex Intelli Draft and Damper system.
- 250CFM of make-up air recommended.
- Optional Inline Fan with flush terminal available. Inquire for details.

VITA | Fireplaces

CALLISTA Triple-Sided | Suspended Gas Fireplace

North American Designed & Manufactured by:

CF + D
custom fireplace design

5230 Harvester Rd. Unit # 2
Burlington, Ontario Canada L7L 4X4
Phone: 905 681-3070 Fax: 905 681-8697

STANDARD PRODUCT WEIGHT	
Anchor (∅ 12"x24" lg.)	85 lbs. approx.
Flue (∅ 8"x67" lg.)	60 lbs. approx.
Fireplace Body	180 lbs. approx.
Total Fireplace weight (for 9ft. ceiling application)	325 lbs. approx.

*Each add'l. 1 ft. of flue pipe weighs : approx. 11 lbs.
*Each add'l. 1 ft. of anchor pipe weighs : approx. 17 lbs.

Shown with Standard 9 ft. Flat Ceiling Application & Gas Burner

PROPRIETARY AND CONFIDENTIAL

THE INFORMATION CONTAINED IN THIS DRAWING IS THE SOLE PROPERTY OF CUSTOM FIREPLACE DESIGN. ANY REPRODUCTION IN PART OR AS A WHOLE WITHOUT THE WRITTEN PERMISSION OF CUSTOM FIREPLACE DESIGN IS PROHIBITED.

UNLESS OTHERWISE SPECIFIED

DIMENSIONS ARE IN INCHES
TOLERANCES:
FRACTIONAL ± 1/16
ANGULAR: MACH ± 1° BEND ±0.5°
TWO PLACE DECIMAL ± 0.01
THREE PLACE DECIMAL ± 0.005

PROJECT
CALLISTA Triple-Sided | Suspended Gas Fireplace

PART NUMBER	REV
	0

DESCRIPTION
Assembly

	NAME	DATE (mm/dd/yyyy)
DRAWN	mpanchal	2020-06-17
CHECKED	MV	2020-06-17
APPROVED	--	NA

SIZE **B** | SHEET 2 OF 7 | DO NOT SCALE DRAWING

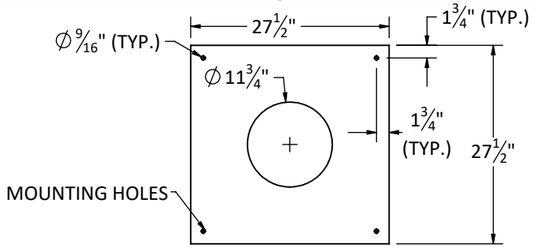

STANDARD ANCHOR PLATE- 1/4" THICK.

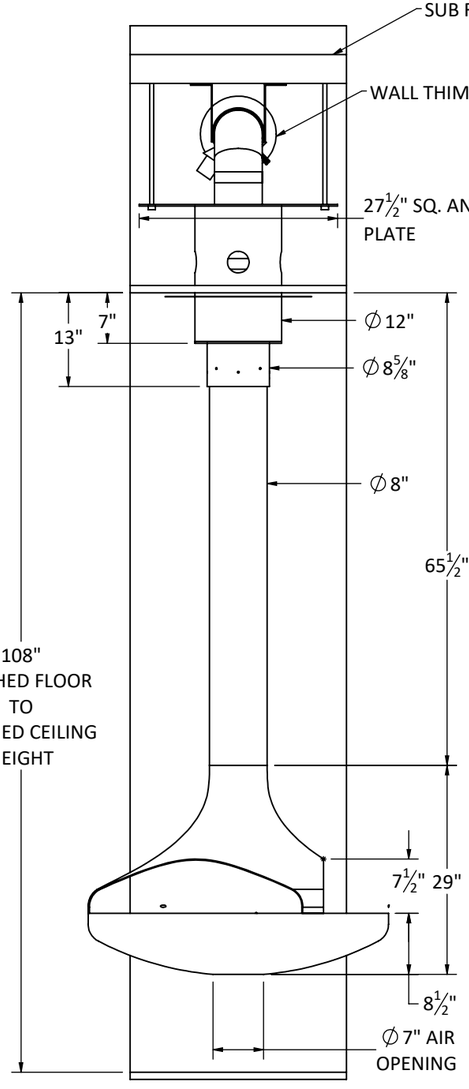

LEFT SIDE ELEVATION

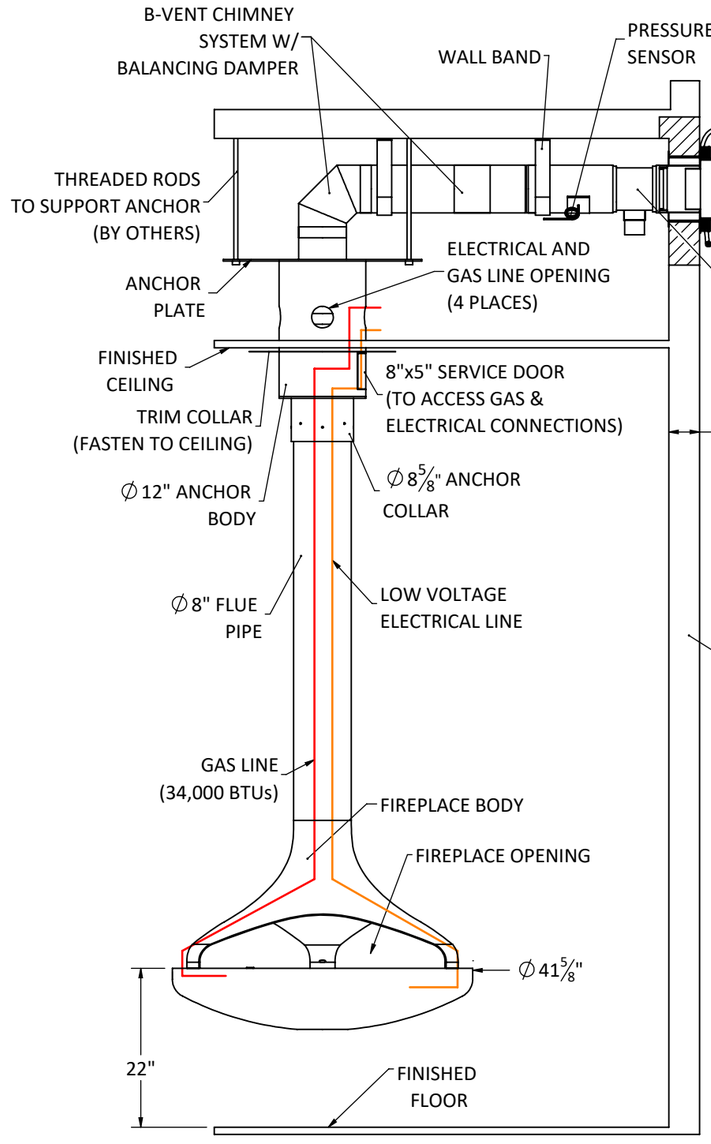

FRONT ELEVATION

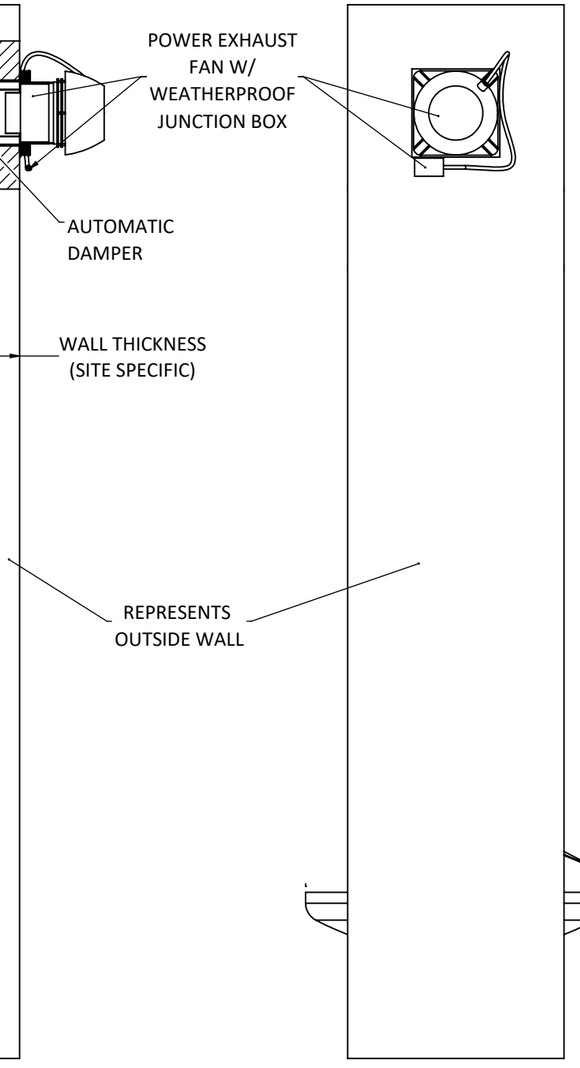

RIGHT SIDE ELEVATION

VITA | Fireplaces

CALLISTA Triple-Sided | Suspended Gas Fireplace

North American Designed & Manufactured by:

CF + D
custom fireplace design

5230 Harvester Rd. Unit # 2
Burlington, Ontario Canada L7L 4X4
Phone: 905 681-3070 Fax: 905 681-8697

PROPRIETARY AND CONFIDENTIAL

THE INFORMATION CONTAINED IN THIS DRAWING IS THE SOLE PROPERTY OF CUSTOM FIREPLACE DESIGN. ANY REPRODUCTION IN PART OR AS A WHOLE WITHOUT THE WRITTEN PERMISSION OF CUSTOM FIREPLACE DESIGN IS PROHIBITED.

UNLESS OTHERWISE SPECIFIED

DIMENSIONS ARE IN INCHES
TOLERANCES:
FRACTIONAL ± 1/16
ANGULAR: MACH ± 1° BEND ±0.5°
TWO PLACE DECIMAL ± 0.01
THREE PLACE DECIMAL ± 0.005

PROJECT
CALLISTA Triple-Sided | Suspended Gas Fireplace

PART NUMBER	REV
	0

DESCRIPTION
Specifications

	NAME	DATE (mm/dd/yyyy)
DRAWN	mpanchal	2020-06-17
CHECKED	MV	2020-06-17
APPROVED	--	NA

SIZE **B** | SHEET 3 OF 7 | DO NOT SCALE DRAWING

CUSTOM ANCHOR OPTIONS AVAILABLE (FILL IN THE BLANKS AS PER SITE SPECIFIC DETAILS)

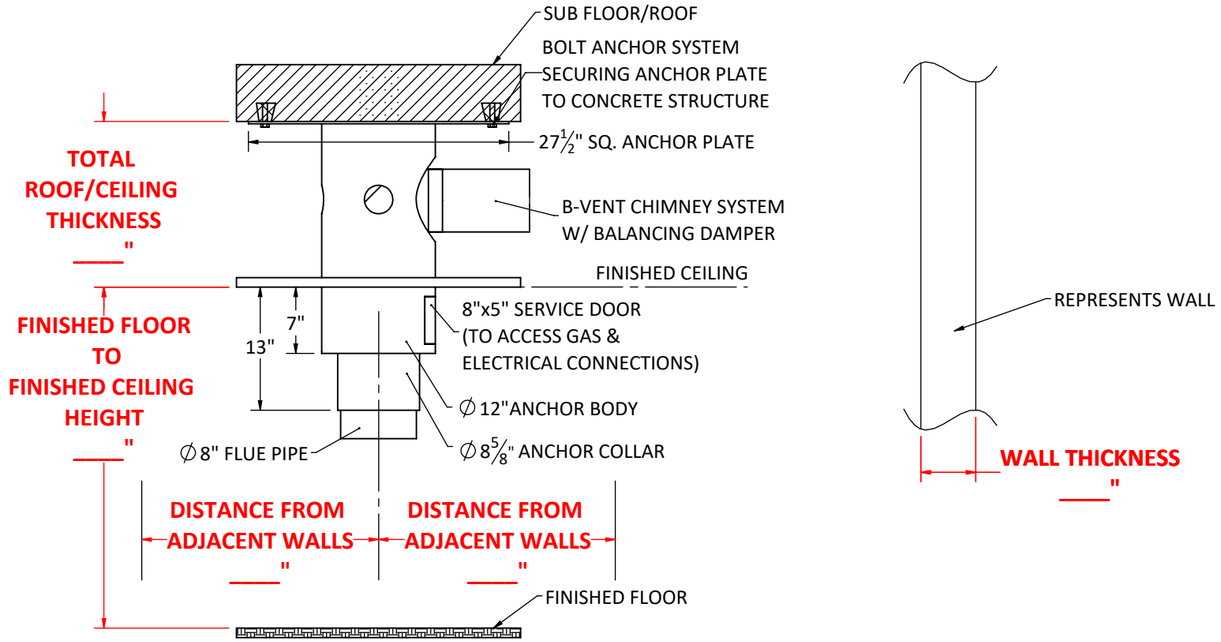

OPTION A - ATTACHED BELOW CONCRETE

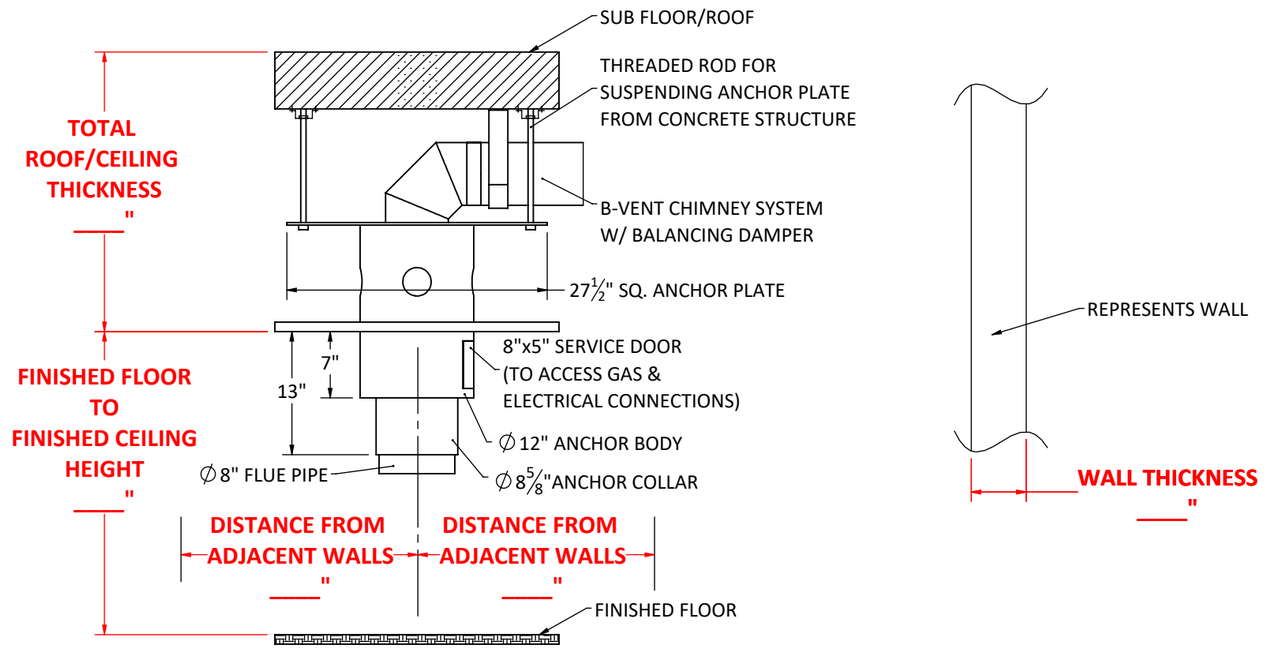

OPTION B - SUSPENDED FROM CONCRETE

VITA | Fireplaces

CALLISTA Triple-Sided | Suspended Gas Fireplace

North American Designed & Manufactured by:

CF + D
custom fireplace design

5230 Harvester Rd. Unit # 2
Burlington, Ontario Canada L7L 4X4
Phone: 905 681-3070 Fax: 905 681-8697

PROPRIETARY AND CONFIDENTIAL

THE INFORMATION CONTAINED IN THIS DRAWING IS THE SOLE PROPERTY OF CUSTOM FIREPLACE DESIGN. ANY REPRODUCTION IN PART OR AS A WHOLE WITHOUT THE WRITTEN PERMISSION OF CUSTOM FIREPLACE DESIGN IS PROHIBITED.

UNLESS OTHERWISE SPECIFIED

DIMENSIONS ARE IN INCHES
TOLERANCES:
FRACTIONAL ± 1/16
ANGULAR: MACH ± 1° BEND ±0.5°
TWO PLACE DECIMAL ± 0.01
THREE PLACE DECIMAL ± 0.005

PROJECT
CALLISTA Triple-Sided | Suspended Gas Fireplace

PART NUMBER

REV
0

DESCRIPTION
Anchor Options

	NAME	DATE (mm/dd/yyyy)
DRAWN	mpanchal	2020-06-17
CHECKED	MV	2020-06-17
APPROVED	--	NA

SIZE **B** | SHEET 4 OF 7 | DO NOT SCALE DRAWING

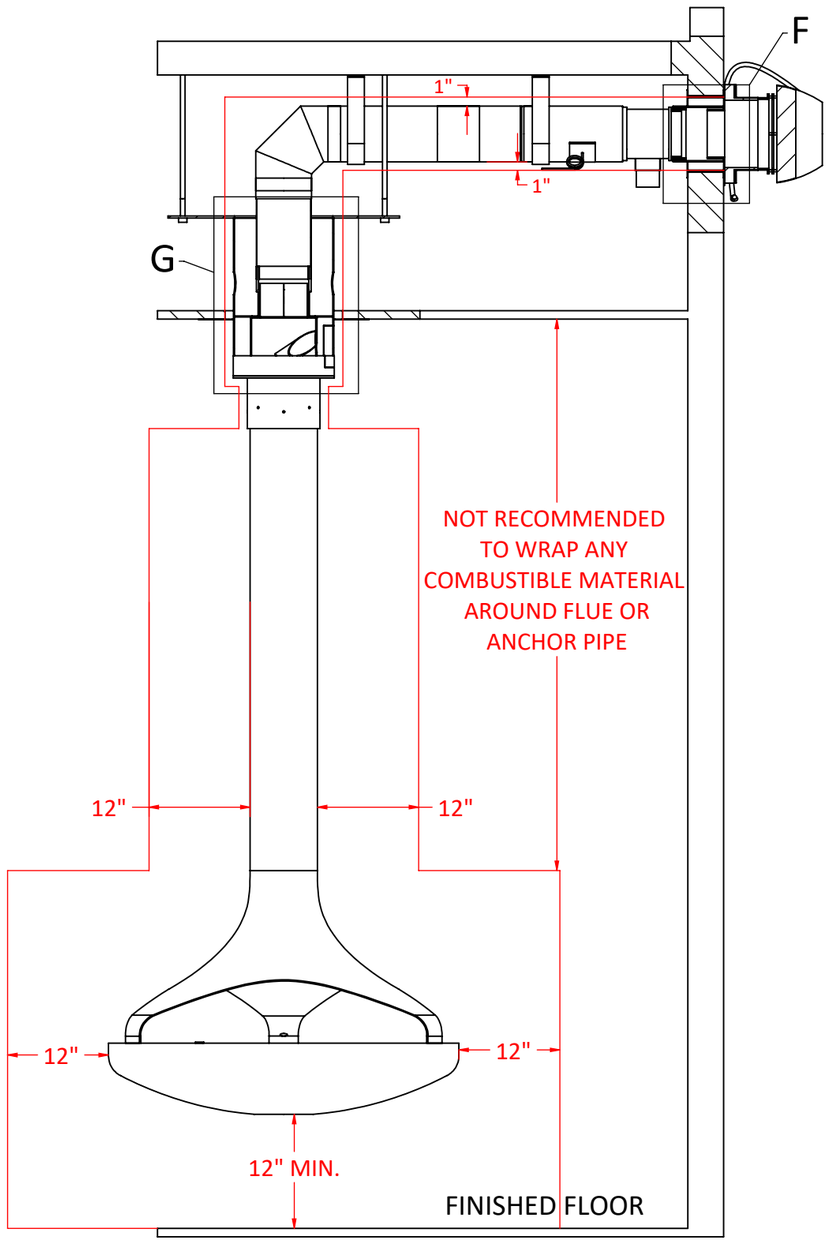

FRONT ELEVATION

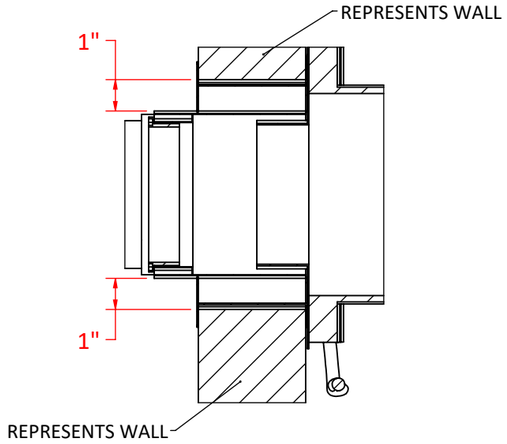

CLEARANCE TO COMBUSTIBLES
AT WALL TERMINATION

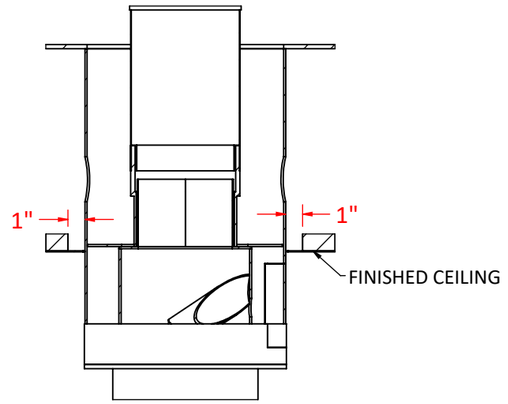

CLEARANCE TO COMBUSTIBLES
AT CEILING

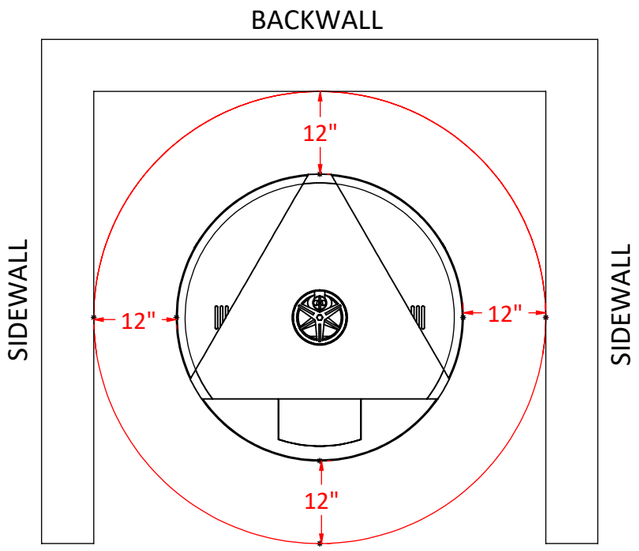

CLEARANCE TO COMBUSTIBLES
AROUND FIREPLACE BODY

CLEARANCE TO COMBUSTIBLES:

1. Minimum 12” from floor to bottom of fireplace.
2. Minimum 12” around the fireplace body and flue pipe.
3. Minimum 1” where the anchor passes through the ceiling/roof.
4. Minimum 1” around the chimney components.

VITA | Fireplaces

CALLISTA Triple-Sided | Suspended Gas Fireplace

North American Designed & Manufactured by:

CF + D
custom fireplace design

5230 Harvester Rd. Unit # 2
Burlington, Ontario Canada L7L 4X4
Phone: 905 681-3070 Fax: 905 681-8697

PROPRIETARY AND CONFIDENTIAL

THE INFORMATION CONTAINED IN THIS DRAWING IS THE SOLE PROPERTY OF CUSTOM FIREPLACE DESIGN. ANY REPRODUCTION IN PART OR AS A WHOLE WITHOUT THE WRITTEN PERMISSION OF CUSTOM FIREPLACE DESIGN IS PROHIBITED.

UNLESS OTHERWISE SPECIFIED

DIMENSIONS ARE IN INCHES
TOLERANCES:
FRACTIONAL ± 1/16
ANGULAR: MACH ± 1° BEND ±0.5°
TWO PLACE DECIMAL ± 0.01
THREE PLACE DECIMAL ± 0.005

PROJECT

CALLISTA Triple-Sided | Suspended Gas Fireplace

PART NUMBER	REV
	0

DESCRIPTION

Clearance to Combustibles

	NAME	DATE (mm/dd/yyyy)
DRAWN	mpanchal	2020-06-17
CHECKED	MV	2020-06-17
APPROVED	--	NA

SIZE **B** | SHEET 5 OF 7 | DO NOT SCALE DRAWING

TYPICAL VITA GAS ENERVEX ELECTRICAL DIAGRAM

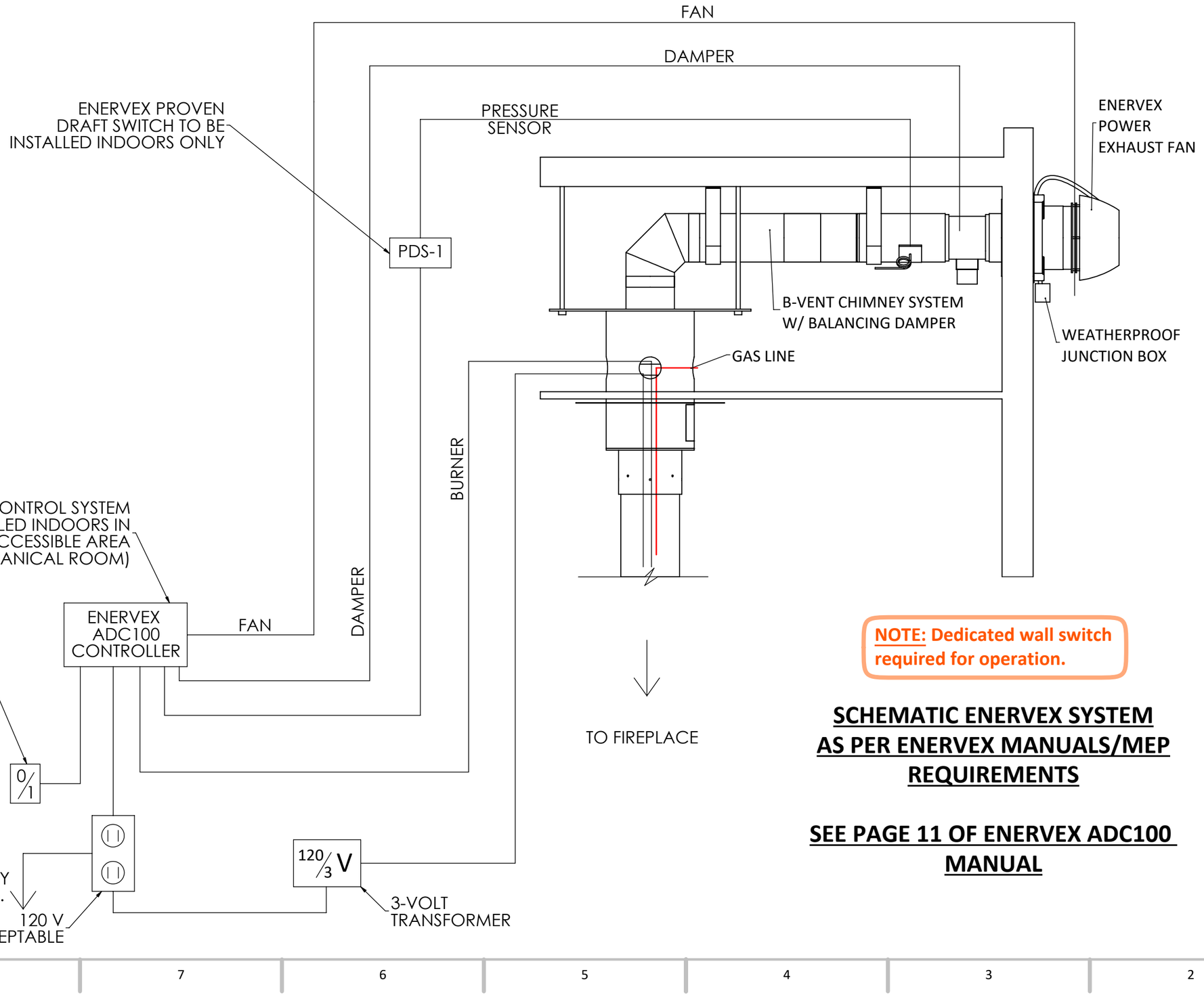

NOTE: Dedicated wall switch required for operation.

SCHEMATIC ENERVEX SYSTEM AS PER ENERVEX MANUALS/MEP REQUIREMENTS

SEE PAGE 11 OF ENERVEX ADC100 MANUAL

VITA | Fireplaces

CALLISTA Triple-Sided | Suspended Gas Fireplace

North American Designed & Manufactured by:

CF + D
custom fireplace design

5230 Harvester Rd. Unit # 2
Burlington, Ontario Canada L7L 4X4
Phone: 905 681-3070 Fax: 905 681-8697

PROPRIETARY AND CONFIDENTIAL

THE INFORMATION CONTAINED IN THIS DRAWING IS THE SOLE PROPERTY OF CUSTOM FIREPLACE DESIGN. ANY REPRODUCTION IN PART OR AS A WHOLE WITHOUT THE WRITTEN PERMISSION OF CUSTOM FIREPLACE DESIGN IS PROHIBITED.

UNLESS OTHERWISE SPECIFIED

DIMENSIONS ARE IN INCHES
TOLERANCES:
FRACTIONAL ± 1/16
ANGULAR: MACH ± 1° BEND ±0.5°
TWO PLACE DECIMAL ± 0.01
THREE PLACE DECIMAL ± 0.005

PROJECT
CALLISTA Triple-Sided | Suspended Gas Fireplace

PART NUMBER	REV
	0

DESCRIPTION
Electrical Diagram

	NAME	DATE (mm/dd/yyyy)
DRAWN	mpanchal	2020-06-17
CHECKED	MV	2020-06-17
APPROVED	--	NA

SIZE B | SHEET 6 OF 7 | DO NOT SCALE DRAWING

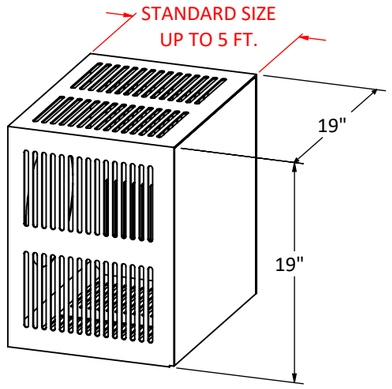

OPTIONAL DECORATIVE CHIMNEY COVER (SQUARE)

OPTIONAL DECORATIVE CHIMNEY COVER (SQUARE)

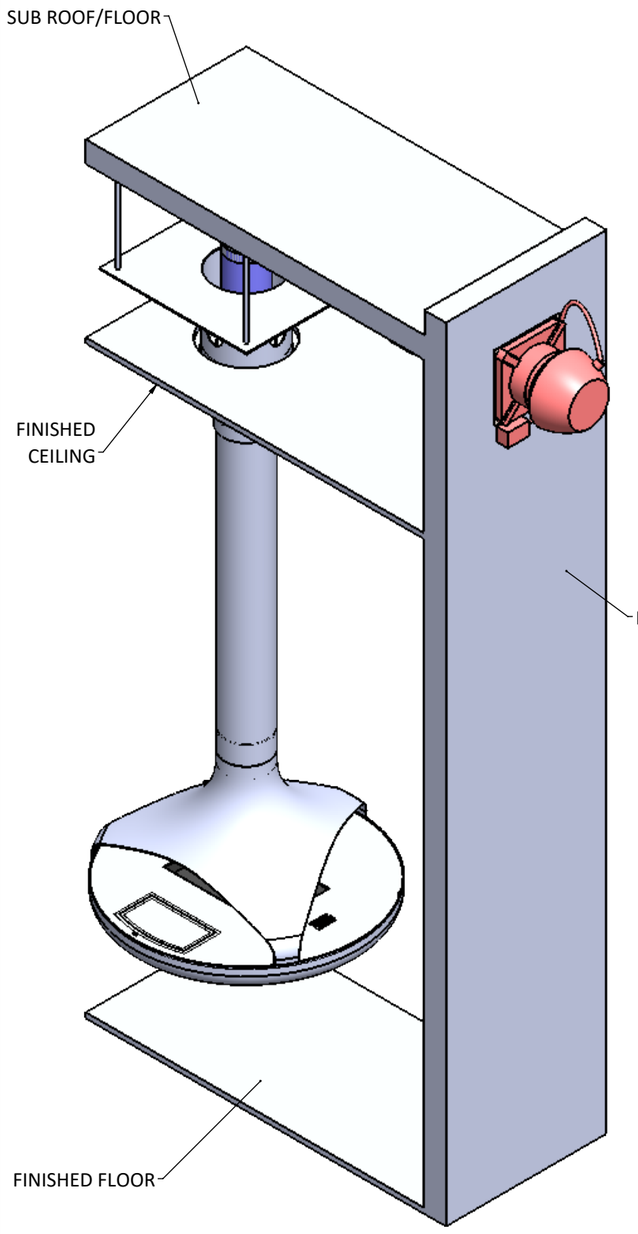

WITHOUT DECORATIVE CHIMNEY COVER

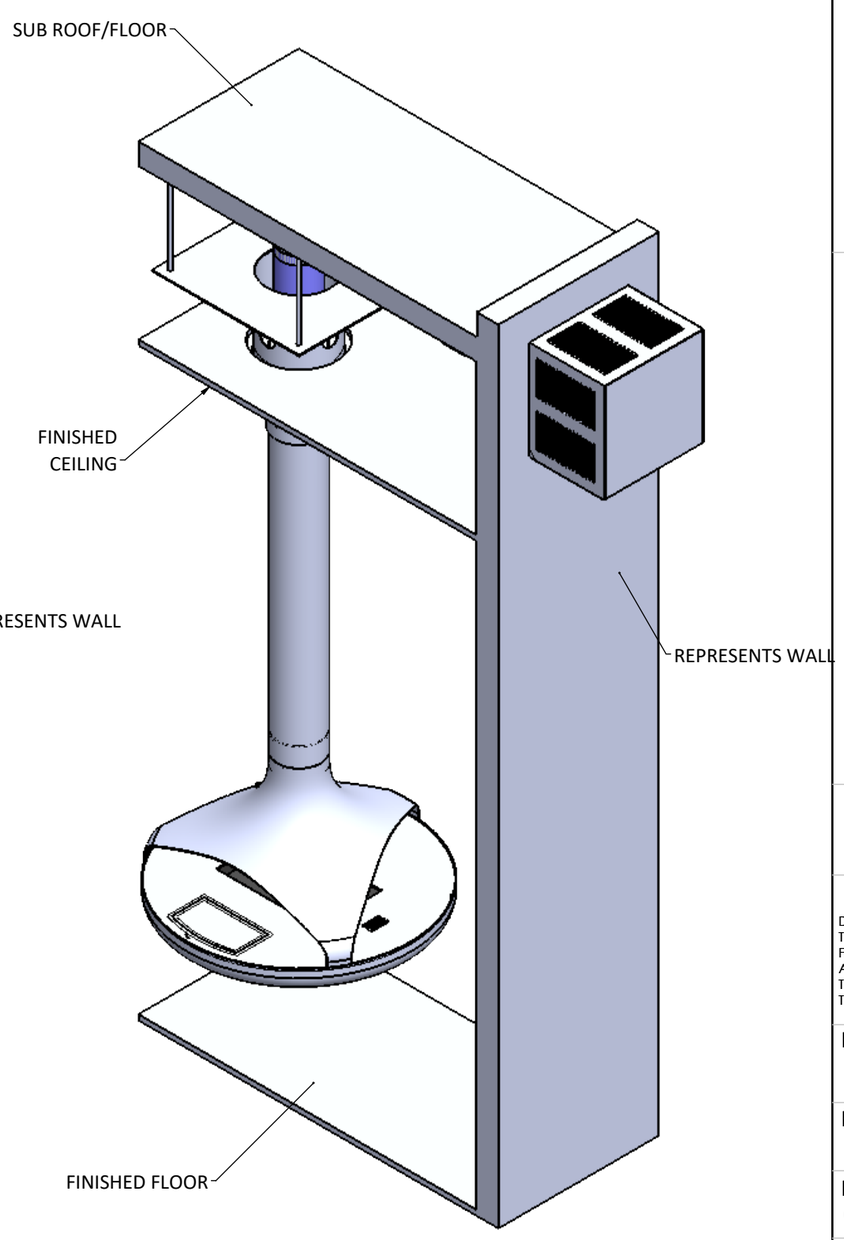

WITH DECORATIVE CHIMNEY COVER

VITA | Fireplaces

CALLISTA Triple-Sided | Suspended Gas Fireplace

North American Designed & Manufactured by:

CF + D
custom fireplace design

5230 Harvester Rd. Unit # 2
Burlington, Ontario Canada L7L 4X4
Phone: 905 681-3070 Fax: 905 681-8697

Shown with Standard 9 ft. Flat Ceiling Application & Gas Burner
Custom Lengths & Anchor Options Available

PROPRIETARY AND CONFIDENTIAL

THE INFORMATION CONTAINED IN THIS DRAWING IS THE SOLE PROPERTY OF CUSTOM FIREPLACE DESIGN. ANY REPRODUCTION IN PART OR AS A WHOLE WITHOUT THE WRITTEN PERMISSION OF CUSTOM FIREPLACE DESIGN IS PROHIBITED.

UNLESS OTHERWISE SPECIFIED

DIMENSIONS ARE IN INCHES
TOLERANCES:
FRACTIONAL ± 1/16
ANGULAR: MACH ± 1° BEND ±0.5°
TWO PLACE DECIMAL ± 0.01
THREE PLACE DECIMAL ± 0.005

PROJECT

CALLISTA Triple-Sided | Suspended Gas Fireplace

PART NUMBER	REV
	0

DESCRIPTION

Optional Decorative Cover

	NAME	DATE (mm/dd/yyyy)
DRAWN	mpanchal	2020-06-17
CHECKED	MV	2020-06-17
APPROVED	--	NA

SIZE B | SHEET 7 OF 7 | DO NOT SCALE DRAWING