VITA | Fireplaces

North American Designed & Manufactured by CF + D | custom fireplace design

Image shown is for illustration purpose and may include some optional features.

MAXIM | Suspended Hood with Base Wood Burning Fireplace

The fireplace has been tested and certified to meet the standards of UL 737-Standard for Fireplace Stoves. & CAN/ULC - S610- Standard for Factory-Built Fireplace Systems. Certified Under - ICC-ES PMG-1574

PRODUCT LAYOUT PACKAGE

2022-02-21

CF + D | custom fireplace design

www.customfireplacedesign.com

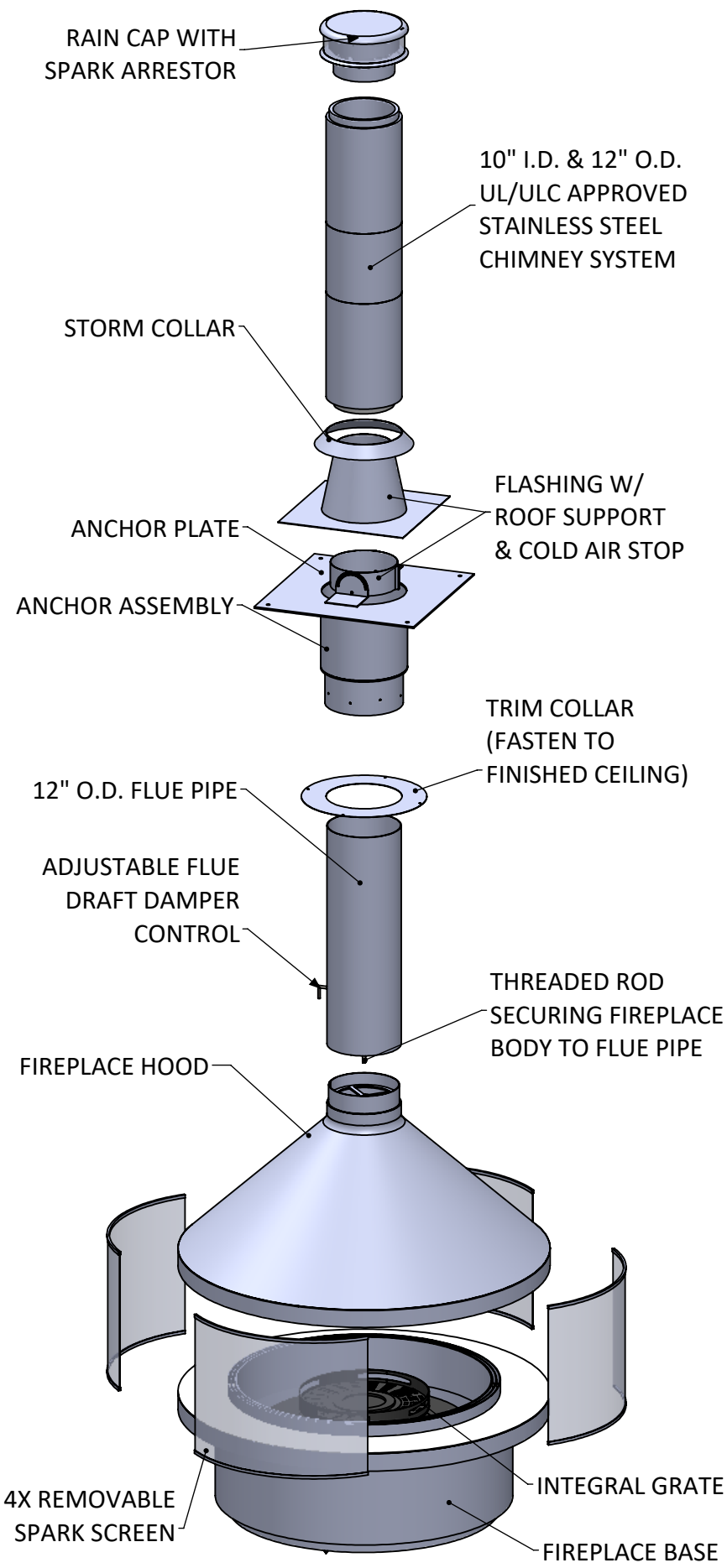

EXPLODED VIEW

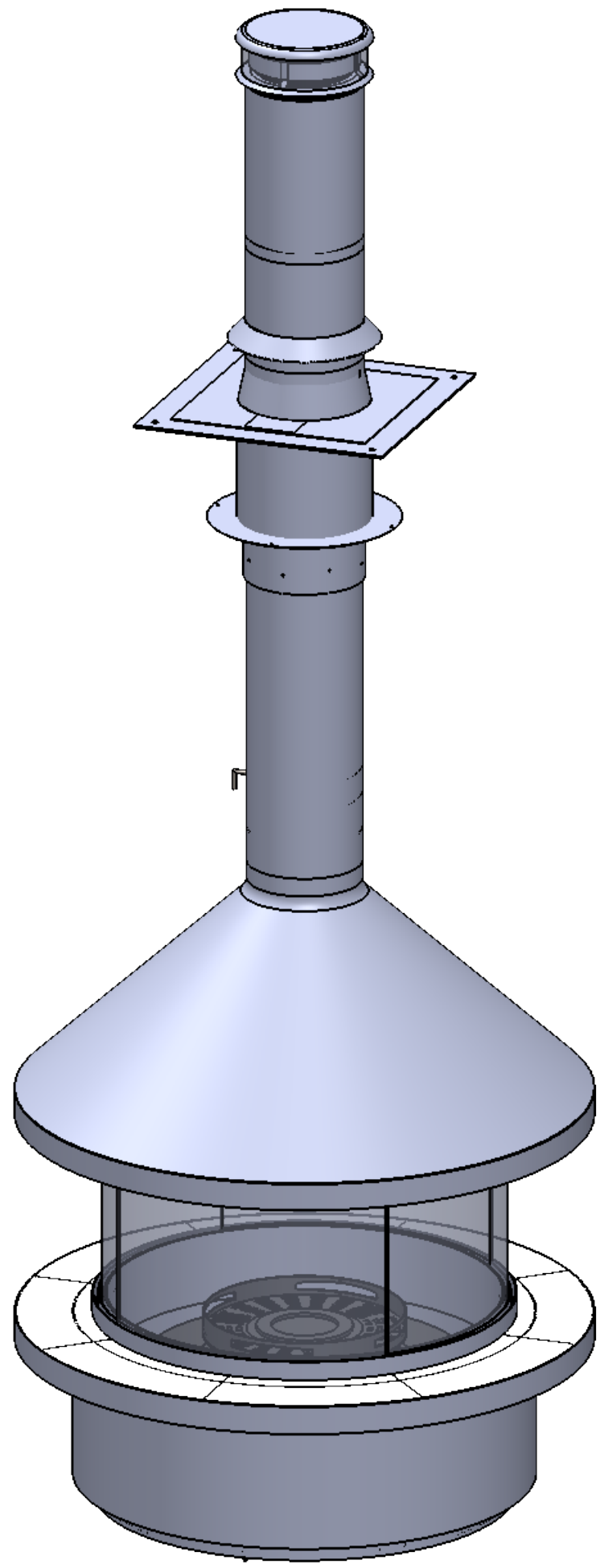

ASSEMBLY VIEW

MAXIM | Suspended Hood with Base Wood Burning Fireplace

Product Information

- For use with Solid wood fuel only.
- UL/ULC Approved Stainless Steel Chimney System
- All Standard fireplaces are painted in a High heat factory Flat Black finish.
- All dimensions are in inches.
- Exact measurements may vary ± ¼".
- Custom integral grate assembly.
- Custom removable spark protection screen.
- Adjustable flue draft damper control.
- The height of the chimney vent must extend a minimum of 3 ft. above the roof exit & a minimum of 2ft. above any obstruction within 10ft. radius.
- A minimum of 15ft. from finished floor to the top of chimney is required for stronger drafts.
- Optional decorative chimney cover available at an add'l cost.
- Custom anchor options available at an add'l cost.
- 350CFM of make-up air recommended.

STANDARD PRODUCT WEIGHTS

SR. NO.	COMPONENT REFERENCE	WEIGHT
1	Anchor (∅ 12.75"x25" lg.)	100 lbs. approx.
2	Flue & Hood (∅ 12"x40" lg.)	190 lbs. approx.
3	Fireplace Body	390 lbs. approx.
Total Fireplace weight (for 9ft. ceiling application)		680 lbs. approx.

*Each add'l. 1 ft. of flue pipe weighs : approx. 17 lbs.
*Each add'l. 1 ft. of anchor pipe weighs : approx. 18 lbs.

North American Designed & Manufactured by:

CF + D | custom fireplace design

5230 Harvester Rd. Unit # 2 Burlington, Ontario Canada L7L 4X4
Phone: 905 681-3070 Fax: 905 681-8697

PROPRIETARY AND CONFIDENTIAL
THE INFORMATION CONTAINED IN THIS DRAWING IS THE SOLE PROPERTY OF CUSTOM FIREPLACE DESIGN. ANY REPRODUCTION IN PART OR AS A WHOLE WITHOUT THE WRITTEN PERMISSION OF CUSTOM FIREPLACE DESIGN IS PROHIBITED.

PROJECT: MAXIM | Suspended Hood with Base Wood Burning Fireplace
REV: 0

UNLESS OTHERWISE SPECIFIED
DIMENSIONS ARE IN INCHES
TOLERANCES:
FRACTIONAL ± 1/16
ANGULAR: MACH ± 1° BEND ±0.5°
TWO PLACE DECIMAL ± 0.01
THREE PLACE DECIMAL ± 0.005

DESCRIPTION: Assembly View

	NAME	DATE (mm/dd/yyyy)
DRAWN	Maulik Panchal	2022-02-21
CHECKED	MV	2022-02-21
APPROVED	--	NA

SIZE **B** SHEET 2 OF 6 DO NOT SCALE DRAWING

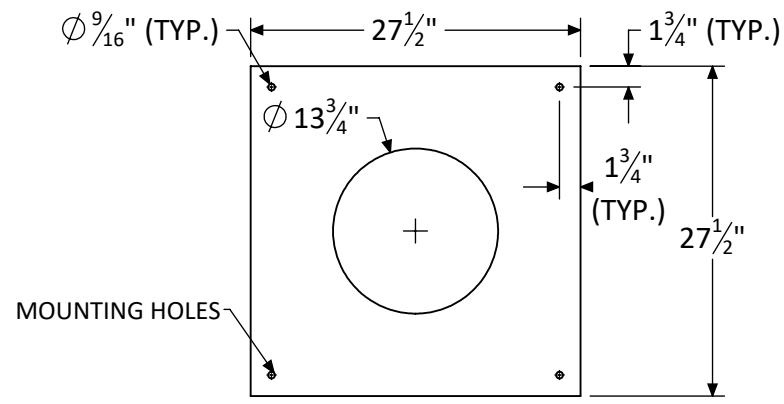

STANDARD ANCHOR PLATE- 1/4" THICK.

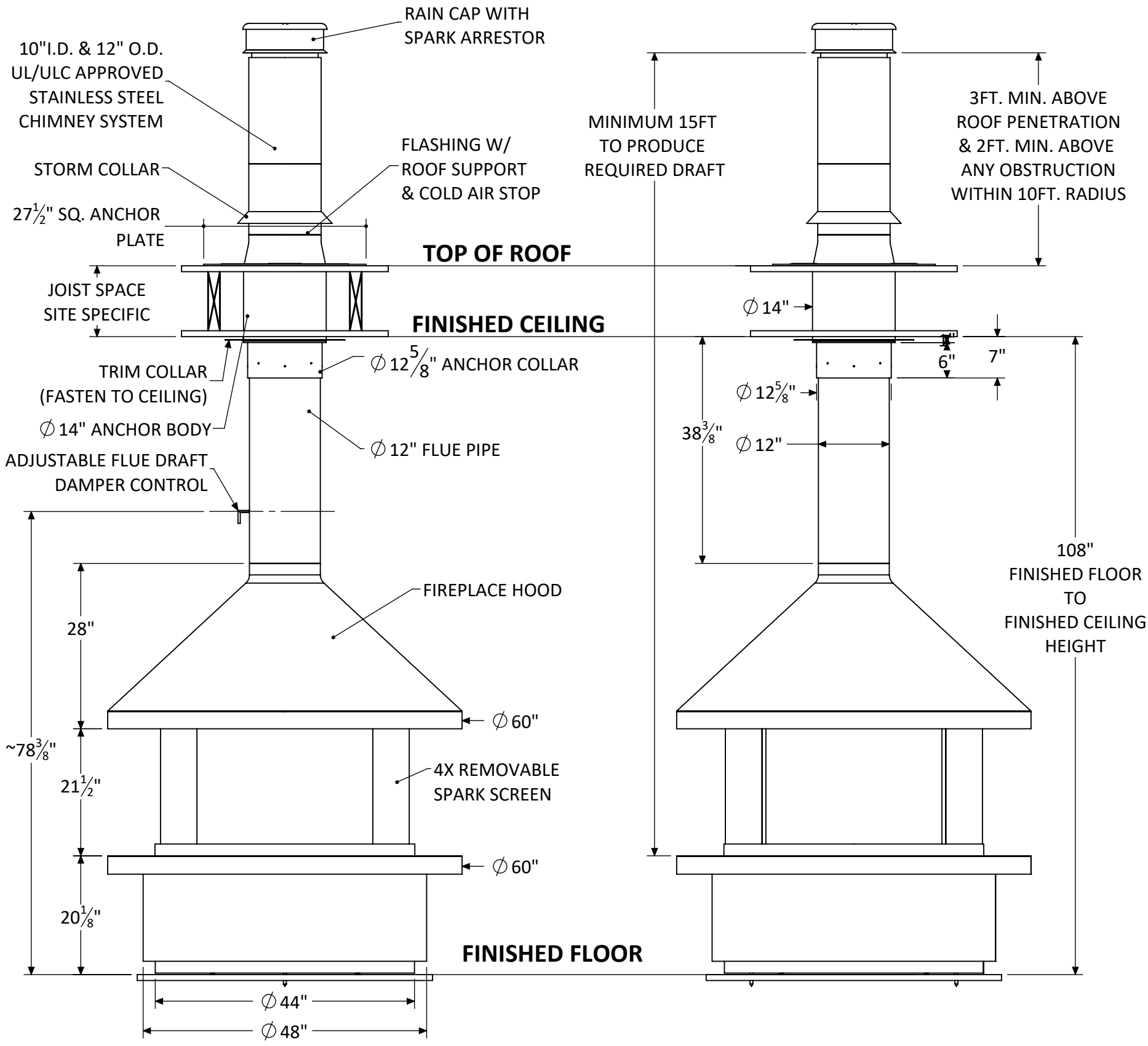

North American Designed & Manufactured by:

CF + D | custom fireplace design

5230 Harvester Rd. Unit # 2 Burlington, Ontario Canada L7L 4X4
Phone: 905 681-3070 Fax: 905 681-8697

PROPRIETARY AND CONFIDENTIAL
THE INFORMATION CONTAINED IN THIS DRAWING IS THE SOLE PROPERTY OF CUSTOM FIREPLACE DESIGN. ANY REPRODUCTION IN PART OR AS A WHOLE WITHOUT THE WRITTEN PERMISSION OF CUSTOM FIREPLACE DESIGN IS PROHIBITED.

PROJECT
MAXIM | Suspended Hood with Base Wood Burning Fireplace

REV 0

UNLESS OTHERWISE SPECIFIED
DIMENSIONS ARE IN INCHES
TOLERANCES:
FRACTIONAL ± 1/16
ANGULAR: MACH ± 1° BEND ±0.5°
TWO PLACE DECIMAL ± 0.01
THREE PLACE DECIMAL ± 0.005

DESCRIPTION
Specifications

	NAME	DATE (mm/dd/yyyy)
DRAWN	Maulik Panchal	2022-02-21
CHECKED	MV	2022-02-21
APPROVED	--	NA

SIZE B SHEET 3 OF 6 DO NOT SCALE DRAWING

CUSTOM ANCHOR OPTIONS AVAILABLE (PLEASE FILL IN THE BLANKS AS PER SITE SPECIFIC DETAILS)

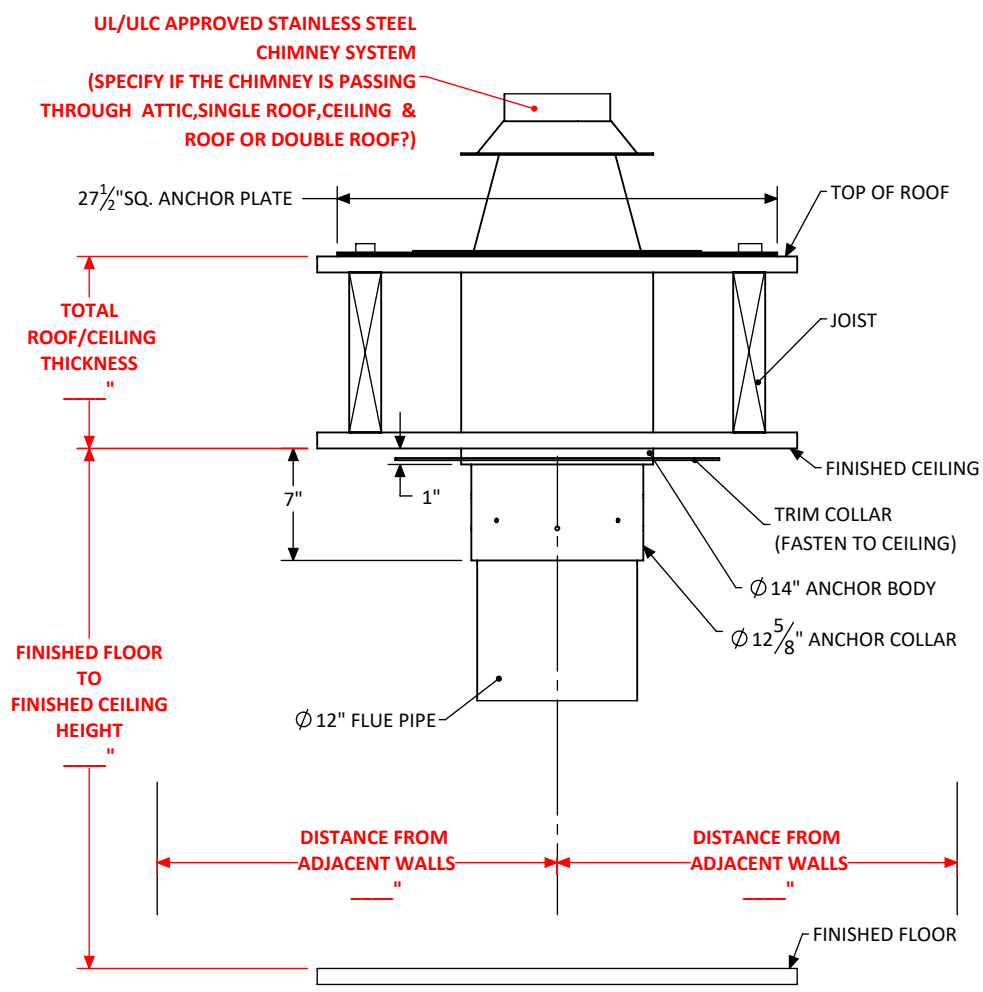

OPTION A - FLAT ROOF DROP FROM ABOVE

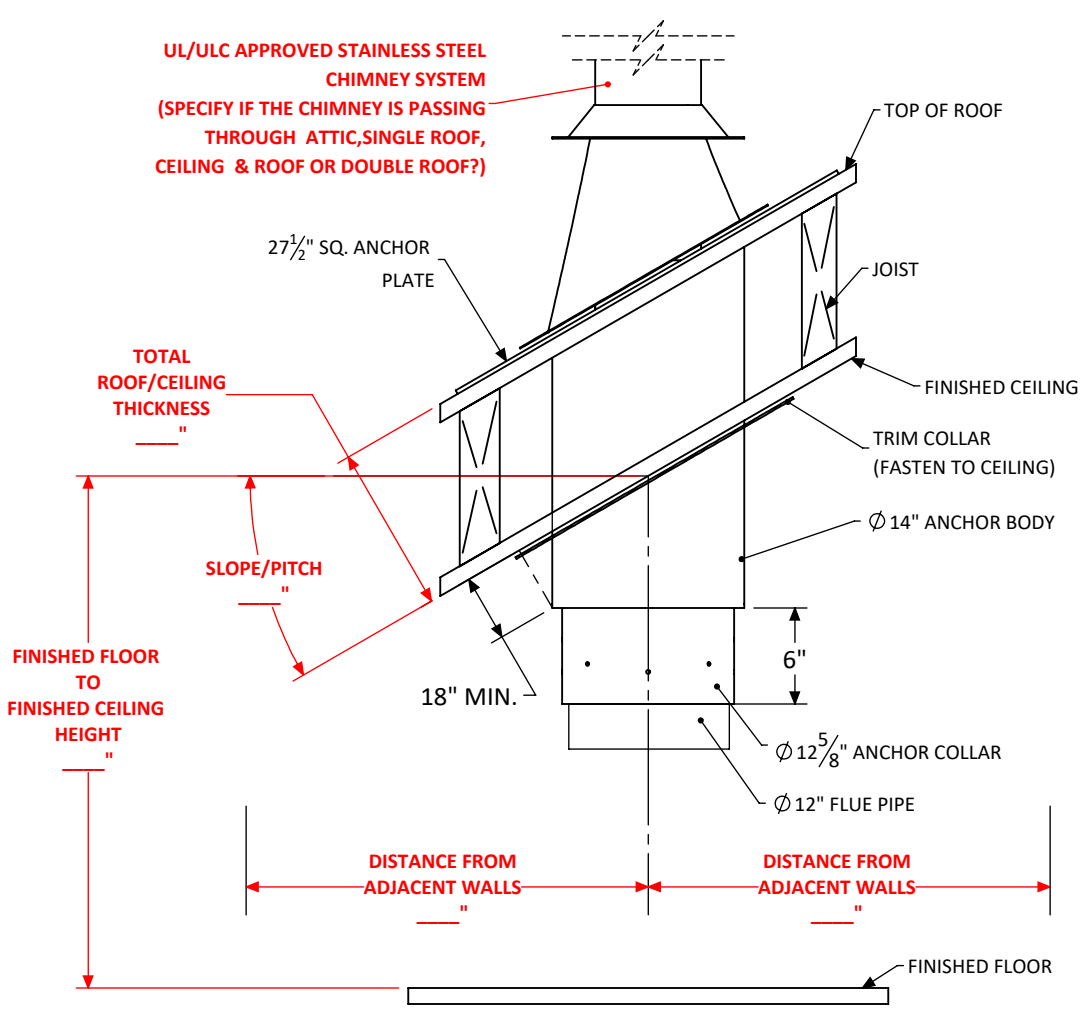

OPTION B - SLOPED ROOF DROP FROM ABOVE

North American Designed & Manufactured by:

CF + D | custom fireplace design

5230 Harvester Rd. Unit # 2 Burlington, Ontario Canada L7L 4X4
Phone: 905 681-3070 Fax: 905 681-8697

PROPRIETARY AND CONFIDENTIAL
THE INFORMATION CONTAINED IN THIS DRAWING IS THE SOLE PROPERTY OF CUSTOM FIREPLACE DESIGN. ANY REPRODUCTION IN PART OR AS A WHOLE WITHOUT THE WRITTEN PERMISSION OF CUSTOM FIREPLACE DESIGN IS PROHIBITED.

PROJECT
MAXIM | Suspended Hood with Base Wood Burning Fireplace

REV 0

UNLESS OTHERWISE SPECIFIED
DIMENSIONS ARE IN INCHES
TOLERANCES:
FRACTIONAL ± 1/16
ANGULAR: MACH ± 1° BEND ±0.5°
TWO PLACE DECIMAL ± 0.01
THREE PLACE DECIMAL ± 0.005

DESCRIPTION
Anchor Options

	NAME	DATE (mm/dd/yyyy)
DRAWN	Maulik Panchal	2022-02-21
CHECKED	MV	2022-02-21
APPROVED	--	NA

SIZE B SHEET 4 OF 6 DO NOT SCALE DRAWING

CLEARANCE TO COMBUSTIBLES

- A minimum of 36” from the combustible materials and/or walls around the fireplace is required.
- 2” around the chimney system & 18” around flue pipe is required.
- A minimum of 18” of non-combustible floor material all around fireplace base including the portion underneath is required.

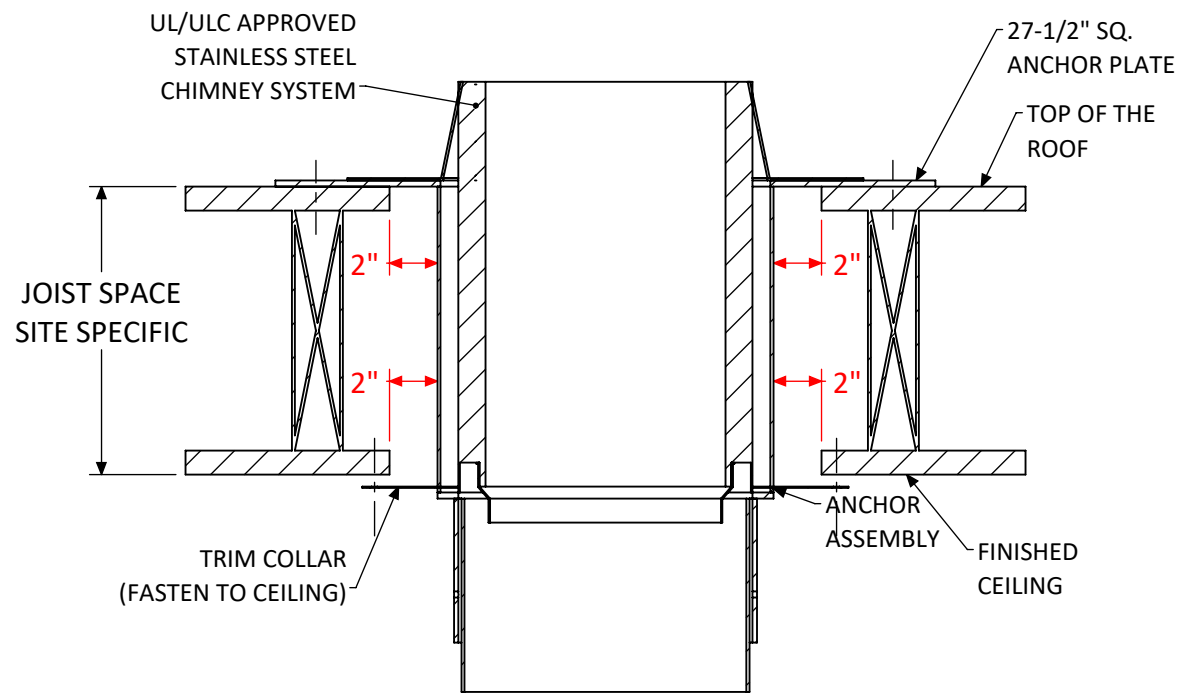

CLEARANCE TO COMBUSTIBLES
AT CEILING AND ROOF

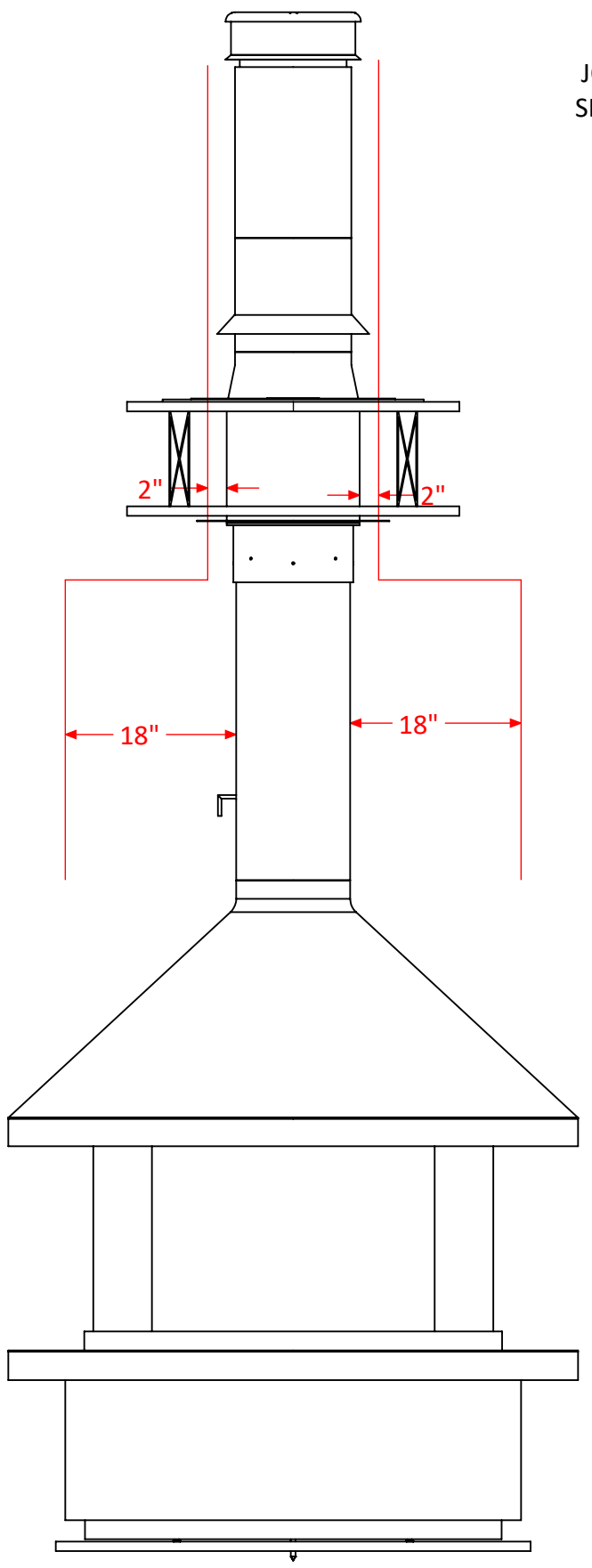

FRONT ELEVATION

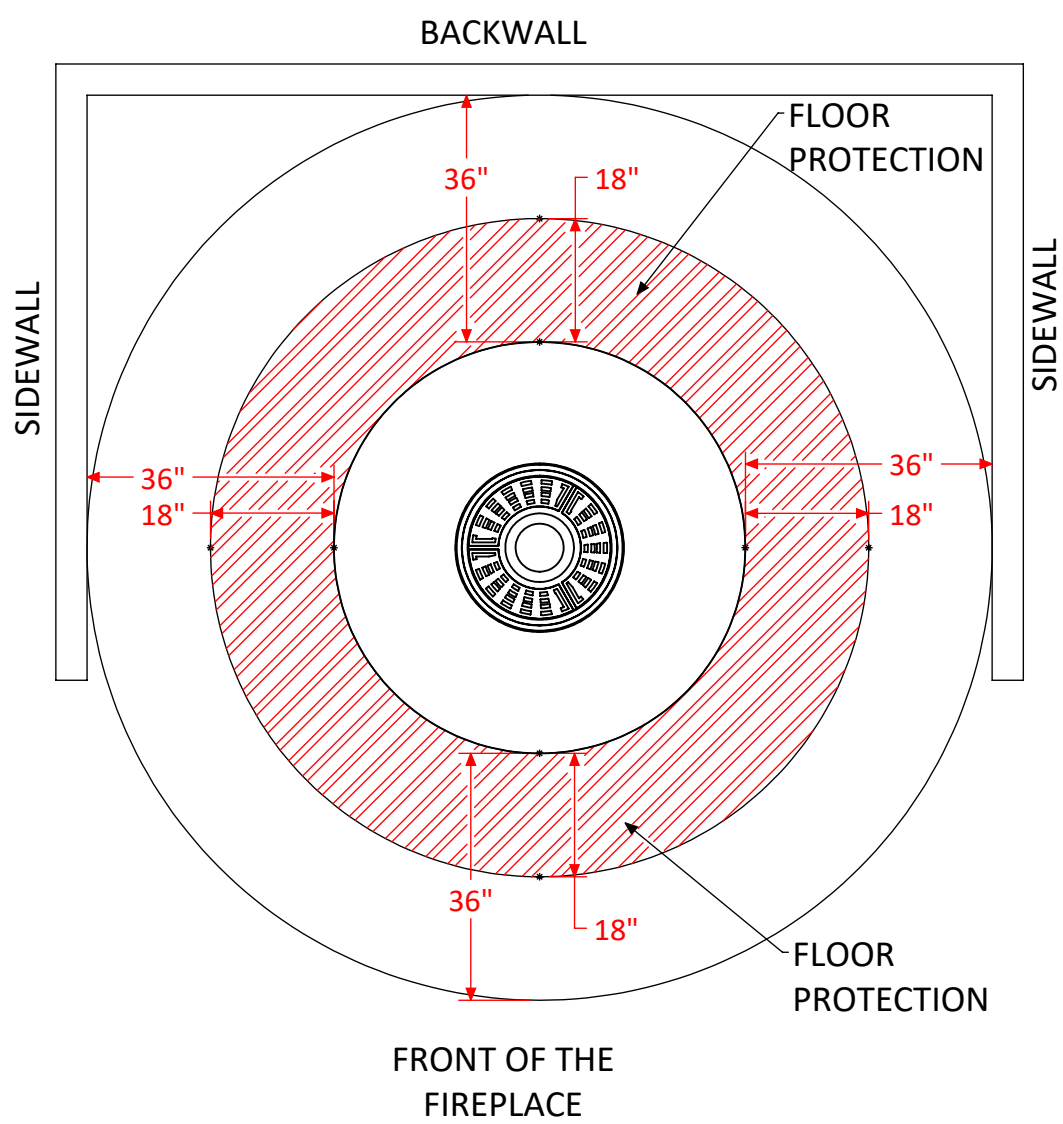

TOP VIEW

CLEARANCE TO COMBUSTIBLES AROUND FIREPLACE BODY &
FLOOR PROTECTION REQUIREMENTS

North American Designed & Manufactured by:

CF + D | custom fireplace design

5230 Harvester Rd. Unit # 2 Burlington, Ontario Canada L7L 4X4
Phone: 905 681-3070 Fax: 905 681-8697

PROPRIETARY AND CONFIDENTIAL
THE INFORMATION CONTAINED IN THIS DRAWING IS THE SOLE PROPERTY OF CUSTOM FIREPLACE DESIGN.
ANY REPRODUCTION IN PART OR AS A WHOLE WITHOUT THE WRITTEN PERMISSION OF CUSTOM FIREPLACE DESIGN IS PROHIBITED.

PROJECT
MAXIM | Suspended Hood with Base Wood Burning Fireplace

REV 0

UNLESS OTHERWISE SPECIFIED
DIMENSIONS ARE IN INCHES
TOLERANCES:
FRACTIONAL ± 1/16
ANGULAR: MACH ± 1° BEND ±0.5°
TWO PLACE DECIMAL ± 0.01
THREE PLACE DECIMAL ± 0.005

DESCRIPTION
Clearance to Combustibles

	NAME	DATE (mm/dd/yyyy)
DRAWN	Maulik Panchal	2022-02-21
CHECKED	MV	2022-02-21
APPROVED	--	NA

SIZE B SHEET 5 OF 6 DO NOT SCALE DRAWING

OPTIONAL DECORATIVE CHIMNEY COVER (ROUND)

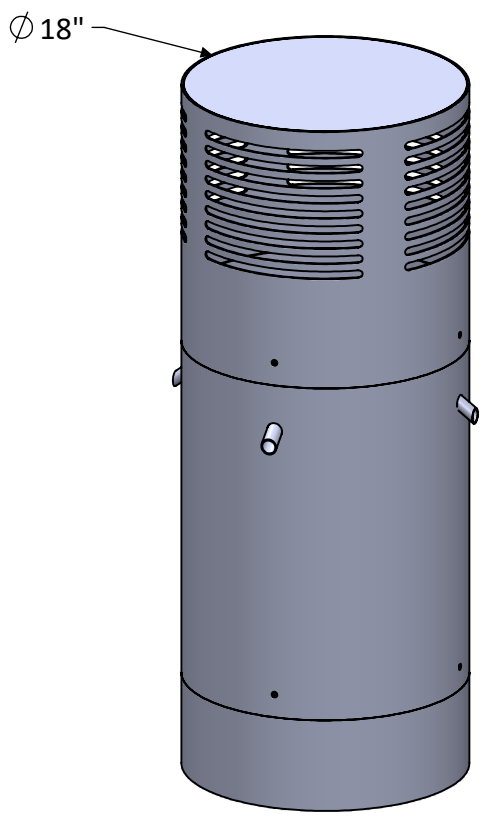

(STANDARD SIZE UP TO 5 FT.)

WITHOUT DECORATIVE CHIMNEY COVER

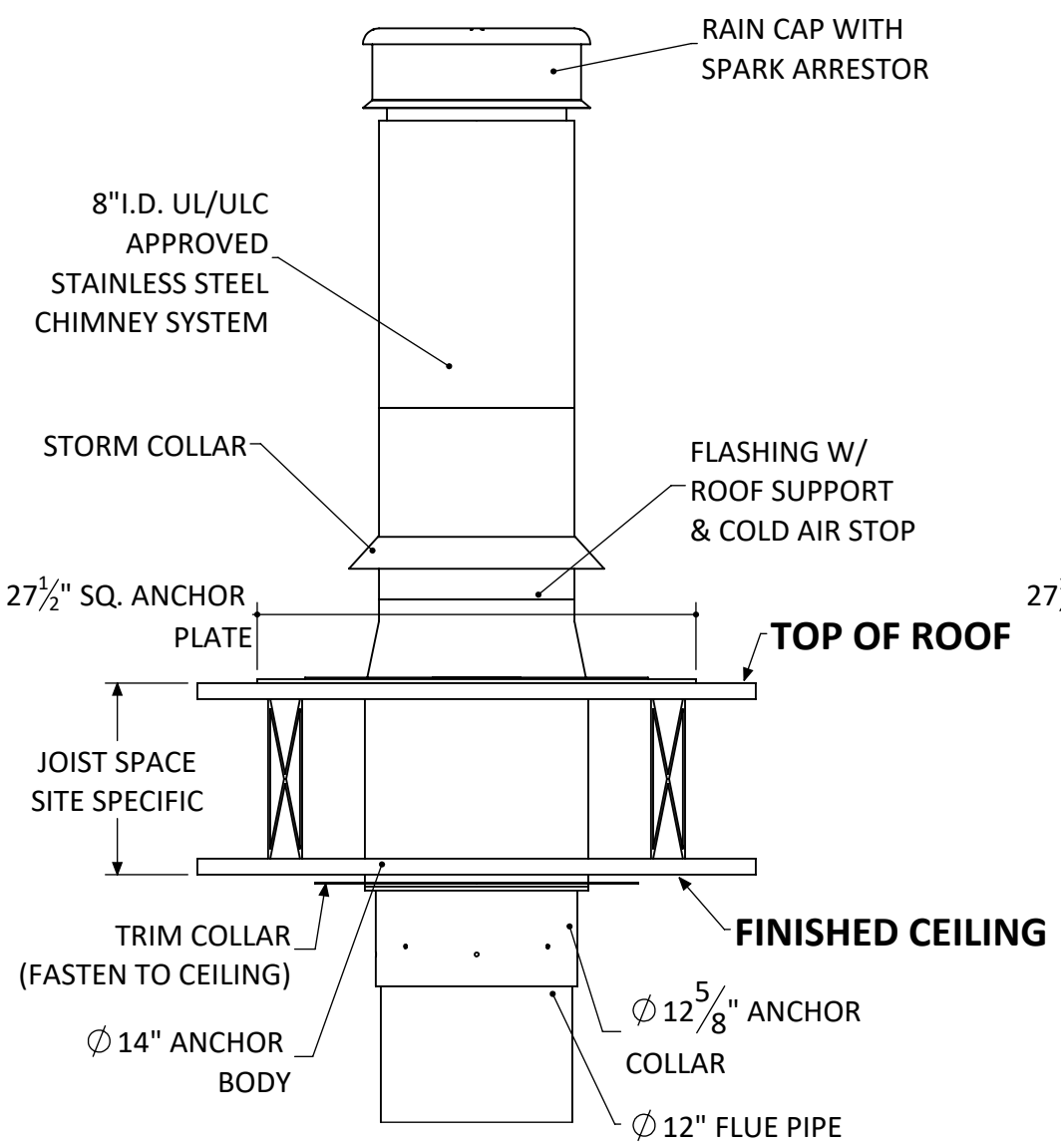

WITH DECORATIVE CHIMNEY COVER

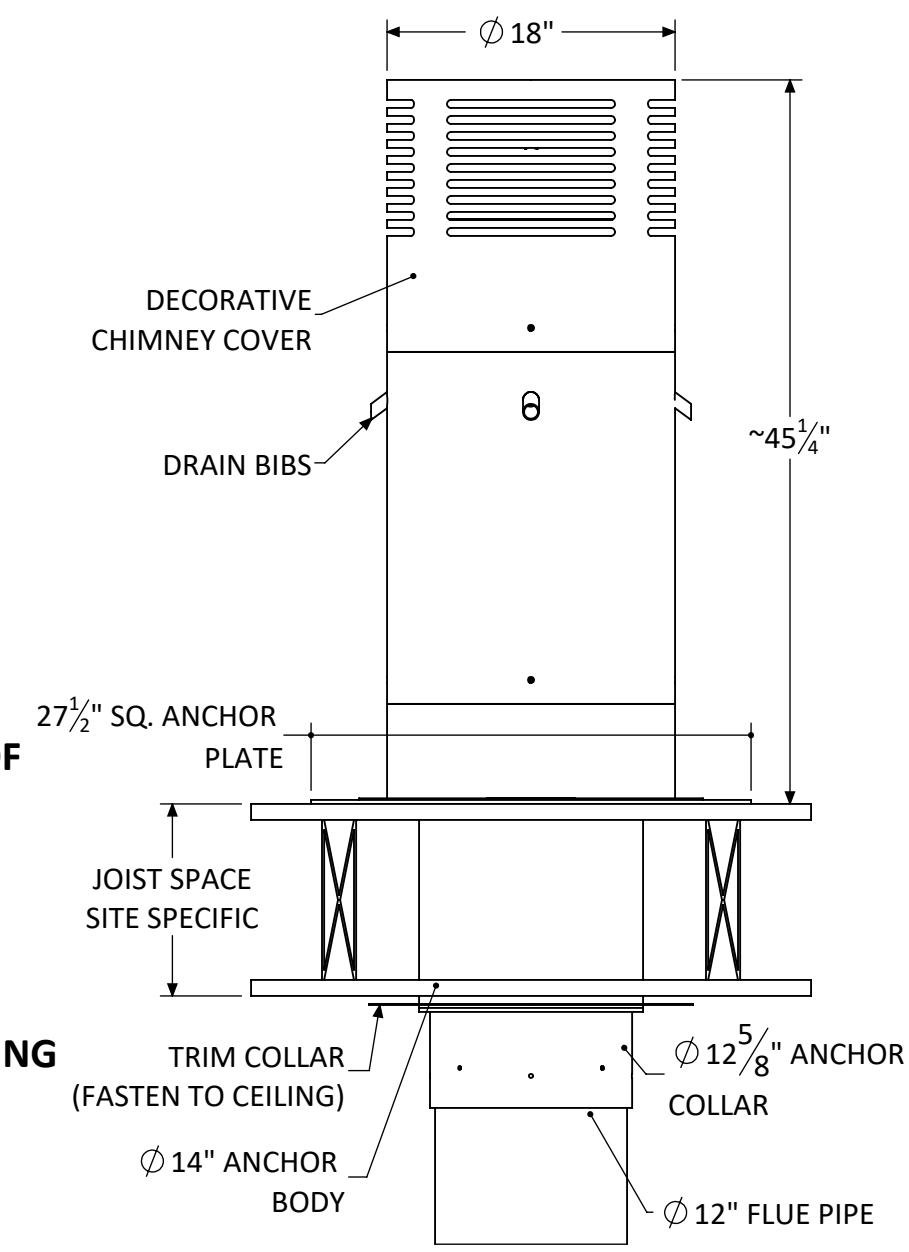

North American Designed & Manufactured by:

CF + D | custom fireplace design

5230 Harvester Rd. Unit # 2 Burlington, Ontario Canada L7L 4X4

Phone: 905 681-3070 Fax: 905 681-8697

PROPRIETARY AND CONFIDENTIAL

THE INFORMATION CONTAINED IN THIS DRAWING IS THE SOLE PROPERTY OF CUSTOM FIREPLACE DESIGN. ANY REPRODUCTION IN PART OR AS A WHOLE WITHOUT THE WRITTEN PERMISSION OF CUSTOM FIREPLACE DESIGN IS PROHIBITED.

PROJECT: MAXIM | Suspended Hood with Base Wood Burning Fireplace

REV: 0

UNLESS OTHERWISE SPECIFIED

DIMENSIONS ARE IN INCHES
TOLERANCES:
FRACTIONAL ± 1/16
ANGULAR: MACH ± 1° BEND ±0.5°
TWO PLACE DECIMAL ± 0.01
THREE PLACE DECIMAL ± 0.005

DESCRIPTION: Decorative Cover Options

	NAME	DATE (mm/dd/yyyy)
DRAWN	Maulik Panchal	2022-02-21
CHECKED	MV	2022-02-21
APPROVED	--	NA

SIZE B SHEET 6 OF 6 DO NOT SCALE DRAWING