VITA | Fireplaces

North American Designed & Manufactured by CF + D | custom fireplace design

Image shown is for illustration purpose and may include some optional features.

IMPORTANT : THIS APPLIANCE IS INTENDED TO BE OPERATED BY A WALL SWITCH, THE TETHERED CONTROLLER ATTACHED TO THE BURNER IS FACTORY-SET AND SHOULD NOT BE ALTERED.

BELLA

Suspended Hood with Base Fireplace and Vapor-Fire Burner

INSTALLATION | OWNER'S MANUAL

Serial #

Read the complete manual before installing and keep for future reference.

CF + D | custom fireplace design

www.customfireplacedesign.com

4/4/19

Table of Contents

APPENDIX A - VITA | Fireplaces Installation

Important Instructions.....Page A

General Information.....Page B

Fireplace Specifications.....Page C

Installation Requirements.....Page D

a) Installation Requirements

b) Required Tools

c) Description

Anchor Plate Installation.....Page E

Trim Collar Installation.....Page E

Anchor Options Diagram.....Page F

Fireplace Hood Installation.....Page G

Flue Extension Instructions.....Page H

Base Installation.....Page H

Vapor-Fire Burner Information.....Page H

Electrical Installation.....Page I

Plumbed-In Option Instructions.....Page I

Initial Fill Instructions.....Pages J & K

Manual Fill Option Instructions.....Page K

Media Plate Instructions.....Page L

Glass Panel Installation.....Page L

Warranty Statement.....Page M

APPENDIX B - Vapor-Fire Service Manual.....Pages 1 - 15

VITA | Fireplaces Installation

CF + D | custom fireplace design

Quality Creativity Innovation

A Letter from Our President:

Our entire team joins me in thanking you for purchasing the BELLA Suspended Hood with Base Fireplace, part of our exclusive line of VITA | Fireplaces featuring Vapor-Fire burner technology, North American designed and manufactured by CF + D | custom fireplace design. We are proud of our quality workmanship, our creativity in designing functional art pieces and our commitment to technical innovation. We welcome the challenges that come across our designer's desks, keeping our creative minds working on developing new ideas with our clients to build their dream fire feature.

Upon receiving this letter your VITA Fireplace has now been shipped and received. The installation, technical and service manuals are included in the package and our Technical Team is available with assistance throughout the installation and start-up of your new VITA fireplace.

The Management, Designers and our Metal Craftsman, thank you again for the opportunity of being a part of your project. We value our clients greatly and are available for consultation before, during and after the installation of your exclusive VITA fireplace.

Vince Volpe
President and CEO
CF + D | custom fireplace design

CF + D | custom fireplace design
5230 Harvester Rd. Unit #2 Burlington, Ontario Canada
L7L 4X4 t. 1-866-909-3070 t. 905-681-3070
www.customfireplacedesign.com

APPENDIX A - Important Instructions

IMPORTANT: Read all instructions before installation.

1. Not for use outdoors.
2. **DO NOT** insert or allow foreign objects to enter any ventilation or exhaust opening as this may cause electric shock.

3. **DO NOT** block airflow openings in any manner.
4. **DO NOT** use in area where gasoline, paint or flammable liquids are used or stored.
5. **DO NOT** burn wood or other materials in this model.
6. Always **USE A CERTIFIED ELECTRICIAN** should new circuits or outlets be required.
7. **DISCONNECT THE POWER SUPPLY BEFORE DOING ANY CLEANING, MAINTENANCE OR RELOCATION OF THE MODEL.**

8. To disconnect the model, turn the controls off and disconnect the power at the service panel.

A dedicated 15 Amp, 120V GFCI is required for electrical.

9. Recommended: 1½" floor drain or condensate pump for potential leak management.

Vapor-Fire Burner:
This equipment has been tested and found to comply with the limits for Class B digital device, pursuant to part 15 of the FCC Rules. These limits are designed to provide reasonable protection against harmful interference.

Construction and electrical outlet wiring must comply with local building codes and other applicable regulations to reduce the risk of fire, electric shock and injury to persons.

10. Tethered Bluetooth control boxes are connected before shipping to ensure proper operation. Also used to sync the remote control for remote operated units. Make sure they are all firmly plugged in for the unit to work properly. They may have become loose during shipping.

DO NOT REMOVE OR DISCONNECT THE TETHERED BLUETOOTH DEVICE FROM INSIDE THE UNIT. It has been factory set to ensure proper operation.

A FRESH AIR INTAKE of 50 inches squared is required for each 20" Vapor-Fire burner for optimum flame production (*Refer to CF + D supplied layout drawings*).

Electrical Dedicated Switch Operation
Recommended for all applications in Commercial Projects
Remote Controls are available upon request

VITA | Fireplaces

4/4/19

General Information

KEEP THIS MANUAL HANDY FOR EASY REFERRAL.
All WARNING and CAUTION SHOULD BE STRICTLY OBSERVED.

Please read this entire manual before you install and use your Vita Fireplaces Vapor-Fire Feature.

Failure to follow the instructions may result in property damage, bodily injury or even death.

When this fire feature is not properly installed, a fire may result. To reduce the risk of fire, follow the installation instructions.

This service bulletin is to serve as a guide to the installation and operation of your fireplace system. It is not intended to replace skilled trades and/or expertise that may be required to perform installations.

All electrical and electronic components must be installed, inspected and tested by qualified persons in accordance with local building codes.

Components described herein are intended as an indication of the components required and/or supplied and is not an exhaustive item listing.

All standard safety practices as indicated by local codes, laws, or OSHA standards must be followed to prevent accident or injury.

Some of the components supplied cannot be installed by a single person nor should they be installed from a ladder.

All site safety arrangements are the responsibility of the Site Supervisor, General Contractor and/or Fireplace Installers, and not CF + D.

USING MAKE-SHIFT COMPROMISES DURING INSTALLATION CAN CAUSE DAMAGE. Such installation is not covered under CF + D limited warranty.

DO NOT CONNECT TO ANY AIR DISTRIBUTION DUCT OR SYSTEM!

CF + D specializes in creating one-of-a-kind, hand-made artistic fireplaces. While these fire features are generally developed for their aesthetic presence, they are also a functional appliance. As such, natural variations in the material forming processes and patina are part of the sculptural spirit of the fireplace, adding to the beauty and uniqueness of the design.

North American Designed and Manufactured by **CF + D** | custom fireplace design

VITA | Fireplaces

4/4/19

Fireplace Specifications

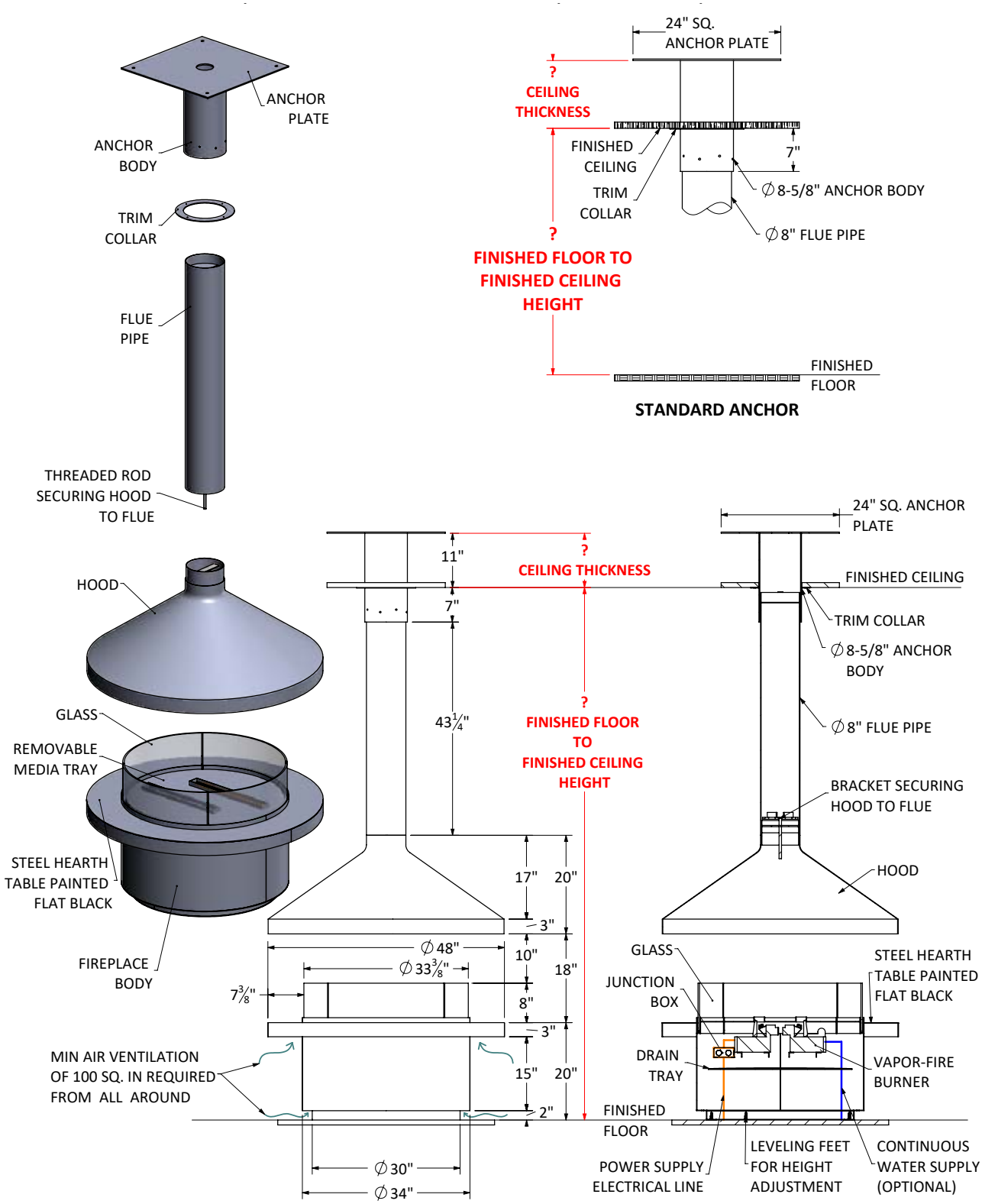

Shown with Standard 9ft. Flat Ceiling Application

Custom Lengths and Anchor Options Available

VITA | Fireplaces

4/4/19

INSTALLATION | OWNER'S MANUAL

BELLA Suspended Hood with Base Fireplace and Vapor-Fire Burner

A) Installation Requirements

- Prepare ceiling for the installation of the anchor plate (*See Anchor Plate Options Page E*).
- Electrical 15 AMP Service 120V GFCI at floor ready for fireplace base placement and the supplied wiring and junction box connections.
- If the client has chosen the option of continuous water, a plumbed-in ½" water line from the main water source is required which will connect to the ¼" plumbing connection supplied with the base. The water shut off is located at the plumbing connection. (*See Instructions Pages H - I*).
- For manual fill operation, two water containers will be supplied with the unit for manual refilling (*See instructions Page J*).

B) Required tools

- Drill
- M8 Allen key
- Level
- Screw drivers
- M12 Allen key
- Scaffolding if necessary
- 2 persons minimum are required for installation.

C) Description

Fireplace Base Weight	275 lbs.
Flue Diameter	8"
Flue Weight	11 lbs. per foot
Hood Diameter	48"
Flue Pipe and Hood Weight	Approx. 135 lbs.
Base Diameter	34"
Flue Length	Made to specification
Number of Glass Panels	4
Standard Anchor Plate Weight	Approx. 77 lbs. - Heavy Gauge steel
Airflow Requirements	100 Square Inches

VITA | Fireplaces

4/4/19

Anchor Plate Installation

Install the Anchor Plate

The first step is to install the anchor plate. The anchor plate will hold the weight of the hood and suspend it from the ceiling or roof. The anchor plate should be secured in place and the hood and flue pipe extension (*if applicable*) should hang level and plumb (*straight*).

A supported opening in the roof or ceiling to accommodate the anchor plate will be required. Adequate and approved structural methods must be used when mounting the anchor for it to carry its designated load.

CAUTION! THE SUPPORT OF THE ANCHOR PLATE (*ROOF STRUCTURE, SLAB, ETC.*) MUST BE SIZED IN ACCORDANCE WITH THE STATIC AND DYNAMIC LOADS OF THE FIREPLACE. THE SIZE CALCULATION FOR THE SUPPORT IS NOT THE RESPONSIBILITY OF CF + D OR ITS AFFILIATES. IT IS YOUR RESPONSIBILITY TO CONSULT WITH AN ENGINEER OR ARCHITECT FOR YOUR PROJECT.

Before starting, verify the location of the hood and fireplace base and the point at which the anchor plate will be positioned. Lift the anchor plate into position to be placed in the prepared supported ceiling or roof. Depending on your application refer to your specific layout drawing for custom anchor plate installation (See *Anchor Plate Options Diagram Page E*).

Place the anchor in the desired location and mount it to the ceiling using ½" screws. Screws must be mounted into studs or solid substrate (*Figure 1*).

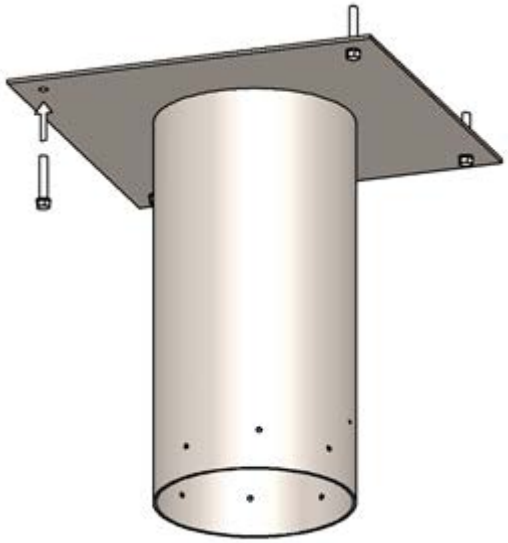

Figure 1

CAUTION! Use multiple people, or portable crane to move fireplace into position.

Install the Trim Collar

Fit the trim collar (*See Page B*) around the anchor body and slide it upwards to meet the finished ceiling. Affix the trim collar to the finished ceiling either by using 4 screws (*not provided*), or other means of attachment depending on your requirements.

NOTE: You will not be able to install the trim collar once the fireplace hood is installed.

Anchor Plate Options Diagram

CUSTOM ANCHOR OPTIONS AVAILABLE

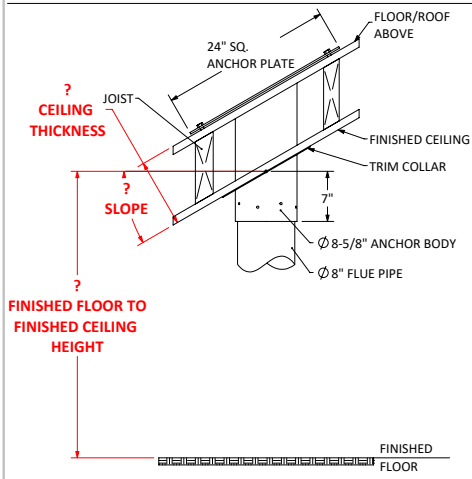

OPTION A - SLOPED DROP FROM ABOVE

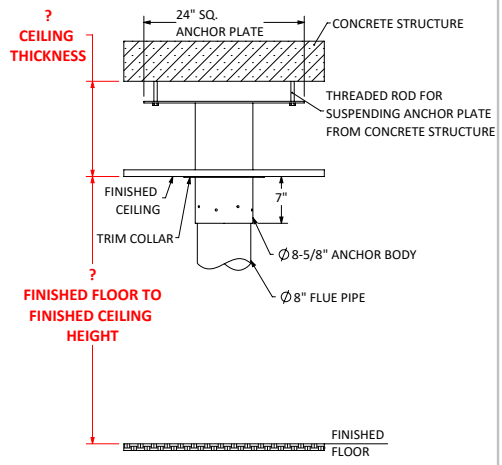

OPTION B - SUSPENDED FROM CONCRETE

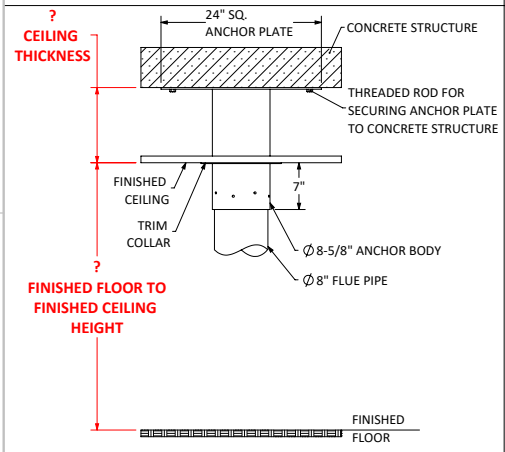

OPTION C - ATTACHED BELOW CONCRETE

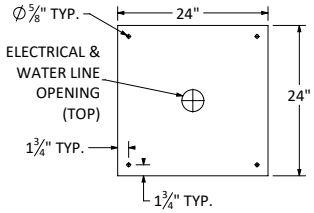

ANCHOR PLATE
24" SQ. x 0.25" THK.

VITA Fireplaces

BELLA Suspended Fireplace with Vapor-Fire Burner

Product Information

- Vapor-Fire burner technology
- Realistic flame without heat
- No chimney venting requirements
- Safe to the touch
- Fueled by regular tap water
- 120 Volt 15 Amp-GFCI
- Main electrical and optional continuous water line to feed from floor to junction box located inside fireplace base.
- All fireplaces come in black matte finish
- Custom colors and patina finishes available
- Heat available, most models

North American Designed & Manufactured by

CF + D | custom fireplace design

WATER SOURCE OPTIONS

OPTION 1: Plumbed-In to main source water line, ½" reduced to ¼" factory set connection.

OPTION 2: Removable 1L container for manual fill approx. 8-10 hour burn time.

Recommended : Leak detection sensor for potential leak management.

Note: Exact measurements may vary ±½".

UNLESS OTHERWISE SPECIFIED:		NAME	DATE	MODEL: BELLA
DIMENSIONS ARE IN INCHES TOLERANCES: FRACTIONAL ± ANGULAR: MACH ± BEND ± TWO PLACE DECIMAL ± THREE PLACE DECIMAL ±	DRAWN	MP	4/2/2019	TITLE: CUSTOM ANCHOR OPTIONS
	CHECKED	MV	4/2/2019	
	ENG APPR.			
	MFG APPR.			
INTERPRET GEOMETRIC TOLERANCING PER:	Q.A.			
MATERIAL	**CF + D** CUSTOM FIREPLACE DESIGN INC. 5230 HARVESTER RD. UNIT # 2 BURLINGTON, ONTARIO CANADA L7L 4X4 PHONE: 905-681-3070 FAX: 905-681-8697			SIZE A · DWG. NO. FMVF-01 · REV 0
FINISH DO NOT SCALE DRAWING				SCALE : NTS · SHEET 3 OF 3

PROPRIETARY AND CONFIDENTIAL
THE INFORMATION CONTAINED IN THIS DRAWING IS THE SOLE PROPERTY OF **CUSTOM FIREPLACE DESIGN INC.** ANY REPRODUCTION IN PART OR AS A WHOLE WITHOUT THE WRITTEN PERMISSION OF **CUSTOM FIREPLACE DESIGN INC.** IS PROHIBITED.

VITA | Fireplaces

4/4/19

Install the Hood

NOTE: If this VITA Fireplace includes a flue pipe extension for ceiling requirements higher than the standard 9ft., you must first install the flue pipe extension(s) before installing the hood (*See Page H*). If this VITA Fireplace does not include any flue pipe extensions, proceed with next step below.

To install the hood, raise the flue end of the hood up to meet the anchor plate (*or flue pipe extension where applicable*) that has now been positioned. The hood is designed to fit directly into the anchor plate when no flue pipe extension is required to meet the floor to ceiling requirements (See *Figure 2*).

CAUTION! Use multiple people, or portable crane to move fireplace into position.

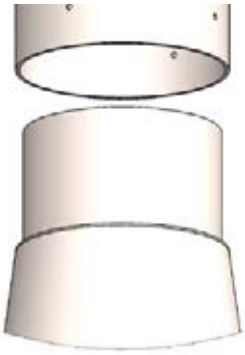

Figure 2

There are 8, pointed load bearing set screws installed into the anchor body and 2 stainless roll (*split*) pins included in the package. The 8 set screws are staggered in position. Begin by loosening each set screw in the anchor body to maximize space for the flue end of the hood to enter the anchor. Raise the fireplace hood into the anchor body until it reaches a full stop (*approximately 6"*).

To ensure that the hood is hanging plumb (*straight*) and level, use a 5⁄32 Allen key to tighten one screw until resistance is felt, tighten the screw directly opposite on the other side of the hood until resistance is felt and continue. When all 8 screws are half tightened, check the position of the hood and continue adjusting until it is perfectly plumb and level and is the desired distance from the floor. The recommended distance between the floor to bottom edge of the hood is 52". For custom applications, please refer to the supplied CF + D layout drawings.

Once the hood is in perfect position, completely tighten each of the 8 set screws firmly securing it to the anchor. Locate the two 1⁄8" pilot holes directly opposite each other in the anchor body.

With a drill, pass a 1⁄8" drill bit through each pilot hole and through the hood. Hammer a roll (*split*) pin (*provided*) through each hole until flush which will permanently lock the hood to the anchor (*Figure 3*).

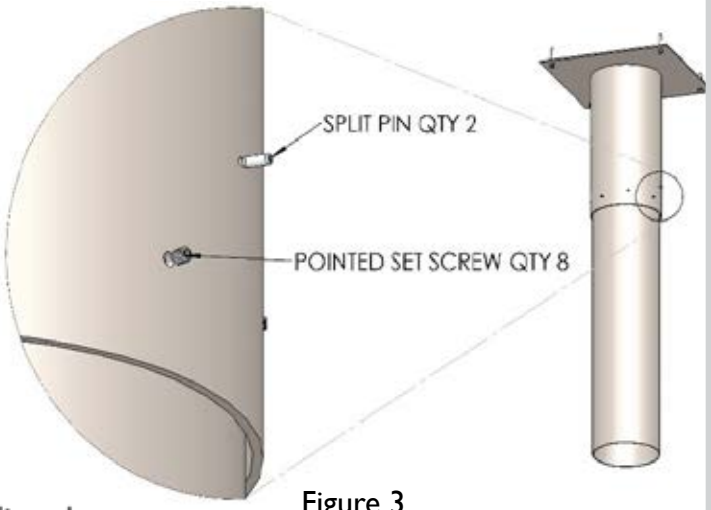

Figure 3

Install the Flue Pipe Extension (*if required*) to Meet Ceiling Requirement

A ½" round rod is welded into the bottom of the flue extension (See *Figure 4 Below*). The top of the long flue pipe has laser cut outs to accommodate the rod in the flue extension. You can now raise the long flue pipe with the male collar that has the laser cut outs in it, into the flue extension pipe. Once raised, twist to pull the lower section up and secure it into place.

Then insert a 3⁄16" roll (*split*) pin into the holes on each side of the flue pipe to lock it in place. The flue pipe extension is now connected.

Proceed to connect the hood (*See Page G*).

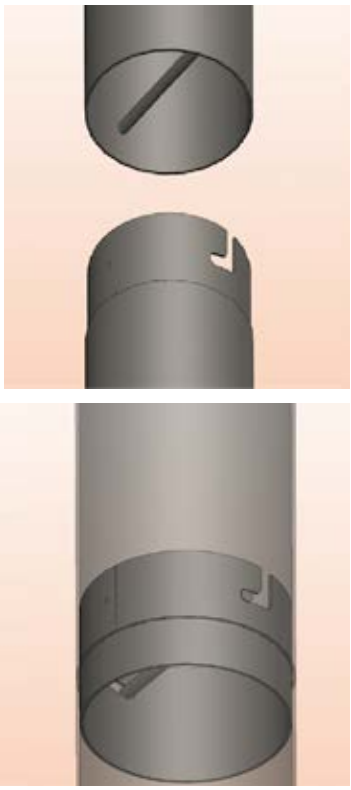

Figure 4

Install the Base

Once the hood is in position, the heavy gauge steel base will be placed and centered directly underneath. The main electrical and plumbing connections (*if continuous plumbing option has been chosen*) are located at the floor where the base has been positioned. Feed the main line(s) through the bottom of the base for connection. For further connection details follow instructions on pages I-K.

The base is factory built with airflow vents located under the toe-kick to allow air into the base for optimum Vapor-Fire effect - **DO NOT BLOCK!** Position the fireplace base with the Vapor-Fire burner facing in the desired direction directly under the hood.

NOTE: This operation will require multiple people.

Vapor-Fire Burner

Inside of the base, the Vapor-Fire burner is installed onto a rectangular drainage tray. The drainage tray is fastened to the L-bracket below by two screws.

CAUTION: DO NOT DISCONNECT the Vapor-Fire! It has been factory set before shipping.

Electrical | Plumbed-In Option Instructions

Electrical Installation

Electrical and ¼" water connection is supplied with the fireplace (*if continuous plumbing has been chosen*) and can be accessed from the top of the base. Feed the flexible electrical and water line(s) up through the inside of the base to make your connections to the junction box and water connection (*see diagram on page F*). There is space inside of the base around and underneath the Vapor-Fire burner which can be accessed from the top of the base.

The junction box has been factory set with the Vapor-Fire burner connected. Connect the main 120V GFCI wire, 15 Amp service to the junction box inside the base (*under the Vapor-Fire burner*).

NOTE: All electrical to be completed first. **Do not** turn on electrical until plumbing has been completed.

The fireplace requires switch power with a dedicated circuit to control the fireplace operation (*on/off switch on wall recommended*).

NOTE: Make sure the Vapor-Fire burner power is off before connecting.

Instructions for Continuous Plumbed-In Systems

NOTE: Plumbing connections should be done by an experienced plumber familiar with plastic tubing and connectors.

- The plumbing accessory kit is designed for use with copper piping.
- Ensure that all plumbing connections meet local plumbing code requirements.
- Ensure that the location of the plumbing connection allows for easy access for shut-off during scheduled maintenance.
- Normal tap water can be used in the Vapor-Fire as long as the tap water is not considered to be hard water. In the event your tap water is hard, softened water is recommended.

Downsize the main ½" plumbing line to ¼" tube and connect to valve (*¼ " supplied and connected to burner before shipping*) which is located in the front right corner of the burner on the bottom. Bring the water line up from the floor inside of the base to meet the ¼"connection. Connect the ¼" water line to the water shut-off valve **BEFORE** securing the fireplace base. Test for water leaks and make sure connections are leak proof. Any slack tubing or wires can be coiled inside the base.

Once the connections are complete, level the base (*if required*). There are two pre-drilled holes on the bottom of the base to be used to secure the base to its permanent position on the floor (*lag bolts not supplied*).

Initial Fill Instructions

There are two ways to complete the initial fill. Both are acceptable whether you have chosen the plumbed-in or manual fill options.

Each VITA Fireplace is supplied with an orange initial fill bottle which is used for priming the reservoir, and/or on a regular basis (*manual fill option*).

Option 1: Fill the reservoir directly

Remove the plumbing fill cap assembly by gently twisting clockwise and move cap to side (*images A & B*). For manual fill VITA | Fireplaces, there will not be a plumbing fill cap assembly present.

A)

B)

Remove top cover assembly on the burner by depressing side tabs gently (*images 1 and 2*).

1)

2)

It is now time to fill the water reservoir(s) with 33.5oz (1L) of water. Take note of water level markers (*image 3 below*). Be sure to fill water level in between the markers in order for the system to learn the proper level to maintain during operation.

3)

Replace the assembly making sure that clips are secure and connect the plumbing fill cap assembly (*if applicable*).

NOTE: this method does not use the orange initial fill bottle.

Option 2: Fill the reservoir using the initial fill bottle

If you have chosen the plumbed-in option, remove the plumbing fill cap assembly (*as outlined in images 1 & 2*). If your VITA fireplace uses the manual fill option, there is no plumbing fill cap assembly.

Fill the orange initial fill container with regular tap water and secure the cap without twisting too tightly. Place the container into the tray with the valve facing downwards as shown in image 3. The valve fits gently into the socket used for the plumbing fill cap assembly (*see image B*). No need to tighten.

VITA | Fireplaces

4/4/19

3)

Allow the water to drain into the reservoir through the valve. You will hear a gurgling sound. Once the water stops draining into the reservoir below, the sound will stop. This means that the Vapor-Fire reservoir has filled to the optimal level. Replace the media plate (*See Page L*).

NOTE: For plumbed-in option replace the plumbing fill cap assembly and media plate. For manual fill Vapor-Fire, re-fill the initial fill bottle and keep for regular operation.

DO NOT attempt to test fire the system until all plumbing and electrical is complete and the correct starting water level has been established. Failure to follow this instruction could incorrectly cause overflow during operation.

Instructions for Manual Fill Containers

- Remove the media tray (*top tray for rocks, logs etc.*) to access the burners.
- Remove the plastic container.
- Manually fill the supplied container with 1 litre of water.
- Secure the top without twisting too tightly.
- Place the container back into position, the water in the container will drain into the reservoir which will fill to the level required for maximum operation (*See Picture 3*).
- After the plastic container is empty or stops flowing into the reservoir, it has now filled to the level required.
- Refill the container with water and replace into position. The maximum operating cycle time will be between 8 to 10 hours.
- Replace the media tray (*See Media Plate Instructions Page L*).

Now arrange your chosen media as desired on top of the media plate. Use caution not to overlap the Vapor-Fire opening as this can interrupt the flame affect. Proceed to turn on the Vapor-Fire fireplace.

NOTE: If after the test fire stage, the unit will be turned off to complete construction, it is recommended to first drain all water from the reservoirs and/or refill containers and dry to protect the transducers from sitting idle in water for extended periods.

NOTE: The Vapor-Fire burner system has been factory set for optimum flame effect. No adjustments required.

Media Plate Instructions

The media plate has three functions:

- The media plate will be lifted to access the Vapor-Fire burner.
- To display the chosen media (*rocks, glass, logs, etc.*).
- To direct the airflow for optimum Vapor-Fire effect.

To place the media plate, hold the top of the Vapor-Fire opening with the opening facing upwards. Place the media tray into the slot inside of the base. There is are alignment marks on top of the media plate that correspond with the locating pins underneath the media plate. When placing the media plate, be sure to set the locating pin into the hole beneath it. Ensure that all edges are flush and snug so that the media plate is flat (*See Diagram Below*).

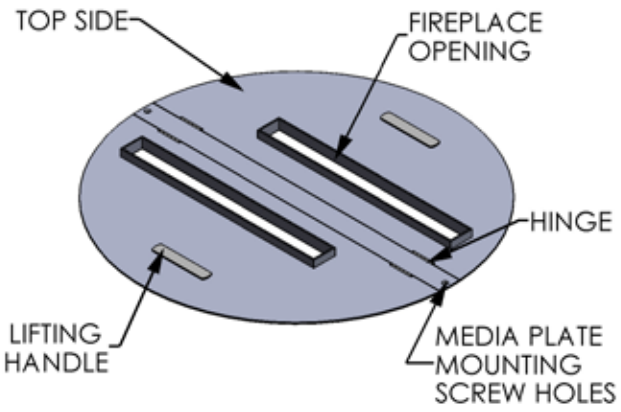

The media plate will need to be lifted during regular maintenance of the fireplace. Lift the media plate by holding the Vapor-Fire opening and carefully lift it up and over the glass panels. Place it aside for safe keeping to conduct maintenance. Use caution not to damage the glass panels.

Glass Panel Installation Instructions

There are 4 panels of curved glass included in the package. Lower each glass panel into the corresponding slot in the base.

NOTE: Use caution when manipulating glass to prevent injury. **DO NOT APPLY FORCE** to the glass as this may cause breakage.

Warranty

CF + D | custom fireplace design

Quality Creativity Innovation

Warranty

All CF + D and VITA | Fireplaces models are guaranteed against any defect in design, construction, or manufacture, and guaranteed to function properly for five (5) years from date of receipt of goods. The electrical and electronic components within the fireplace are warranted against any defect in design, construction, or manufacture, and guaranteed to function properly for one (1) year from date of commissioning. Our product guarantees are applicable only when our Fire Features have been installed with respect to all local building codes and with strict attention to the technical details outlined in our Plan Study as well as our installation, maintenance, and user's manuals. Our guarantee excludes accidental damages such as those occurring during transport without written notification upon receipt, damages incurred during installation, and damages resulting from improper use and is limited to the replacement of the defective part or unit in its entirety at the sole discretion of CF + D the manufacturer. This warranty does not include the reimbursement of labor cost or related costs incurred to conduct the replacement of parts or entire unit should it be deemed necessary.

We thank you for your support and your business!

CF + D | custom fireplace design
5230 Harvester Rd. #2
Burlington, Ontario L7L 4X4
T: 905-681-3070
Toll Free: 1-866-909-3070
F: 905-681-8697
www.customfireplacedesign.com

North American Designed and manufactured by **CF + D** | custom fireplace design

VITA | Fireplaces

2/4/19

Vapor-Fire

By

CF + D | custom fireplace design

Service Manual

For Dimplex

Model(s)
CDFI1000-PRO
6909660300

CDFI500-PRO
6909660400

IMPORTANT SAFETY INFORMATION: Always read this manual first before attempting to service this cassette. For your safety, always comply with all warnings and safety instructions contained in this manual to prevent personal injury or property damage.

CF + D custom fireplace design Inc.
5230 Harvester Rd
Burlington ON. CA L7L 4X4
1-866-909-3070
www.customfireplacedesign.com

REV	PCN	DATE
00	-	21-12-15

In keeping with our policy of continuous product development, we reserve the right to make changes without notice.

7400880000R00

TABLE OF CONTENTS

Operation....3
Maintenance....4
Exploded Parts Diagram....5
Replacement Parts List....5
Wiring Diagram....6
Switch Board Replacement....7
Terminal Block Replacement....7
Fan Assembly Replacement....8
Fused Wire Harness Replacement....8
Main Control Board Replacement....8
Power Supply Replacement....9
LED Light Assembly Replacement....10
Heating Element Replacement....10
Level Sensor Assembly Replacement....11
Solenoid Valve Replacement....12
Troubleshooting Guide....13

Always use a qualified technician or service agency to repair this cassette.

! NOTE: Procedures and techniques that are considered important enough to emphasize.
⚠CAUTION: Procedures and techniques which, if not carefully followed, will result in damage to the equipment.
⚠WARNING: Procedures and techniques which, if not carefully followed, will expose the user to the risk of fire, serious injury, or death.

OPERATION

Figure 1

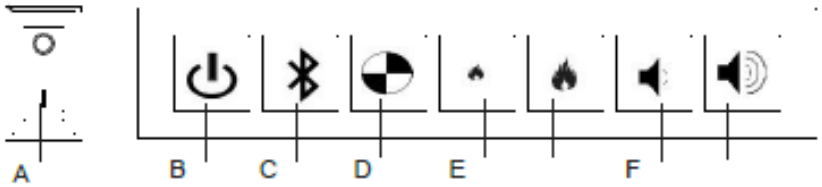

WARNING: This electric firebox must be properly installed before it is used.

The unit has two separate internal modules that are controlled by the settings entered on the left side (primary). Finer adjustment can be done using the controls on the right module to have both modules operating at the same level (secondary).

There are three different control options available for the unit: manual (under the media tray), tethered controller (must be connected to the unit) and a remote control.

! NOTE: When the unit is used in an environment where background noise is very low, it may be possible to hear a sound which is related to the operation of the flame effect. This is normal and should not be a cause for concern.

! NOTE: Always ensure that the appliance is fixed to the framing in a level position.

Controls

A . On/Off Switch

Supplies power to the unit.

! NOTE: When the unit is first turned on the lights will come on and mist will appear 45 seconds later.

B . Standby

Puts the unit into standby mode where control by the tethered controller or remote is possible.

C . Blue tooth

Required for initializing the remote together, see initialization instructions for more detail.

D . Test Mode

Used for troubleshooting issues - outlined in detail in the service manual.

E. Flame Intensity Control

Adjusts the intensity of the flame and smoke effect when the unit has been activated.

Pressing the will decrease the flame effect and pressing the will increase the flame effect.

! NOTE: A few moments will be required between adjustment and a change to the flame effect.

! NOTE: During normal operation it is expected to see some condensation of water on the media tray. This will vary depending on ambient conditions and should be considered normal.

! NOTE: When the water tank is empty the unit will turn off after 30 seconds.

Figure 2

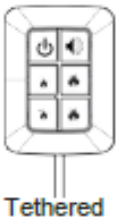

Tethered Controller

! NOTE: The icons with 1 dot indicate controls for the primary and 2 dots indicate controls for the secondary.

F. Volume Control

Adjusts the volume of the wood fire sound effects.

On the unit: Pressing the will decrease the volume and pressing the will increase the volume.

On the Tethered Controller: Pressing the will turn On and Off the volume.

The tethered controller must be connected to the unit and On/Off Switch must be in the 'ON' (I) position in order to operate.

1. Install the tethered controller to the unit - plug into the port on the on the right module and run the wire out of the housing through the opening in the center of the back panel.
2. Place the On/Off Switch (Figure 1A) in the On ("I") position.
3. Press the blue tooth initialization button on the Primary controls (left side).
4. The unit will begin to beep and turn the lights on and off every 2 ½ seconds to indicate that the unit is in synchronization mode.
5. Within 20 seconds of pressing the blue tooth button, it will become visible by an enabled device (figure 2)

! NOTE: You will have only 20 seconds to perform this last step. Failure to do so will result in these steps needing to be followed again.

6. If the synchronization was successful the unit will go to Standby.

This will synchronize the enabled device and the fireplace receiver.

Vapor-Fire Maintenance

⚠ **WARNING:** Disconnect power before attempting any maintenance or cleaning to reduce the risk of fire, electric shock or damage to persons.

Filling the water tank

When the water tank is empty, the flame effect shuts off and you will hear 2 audible beeps, follow these steps.

⚠ **CAUTION:** Allow at least five minutes for components to cool before disassembling the unit to refill.

1. Gently remove the top tray and place it carefully on the ground.
2. Turn the On/Off switch to the off position **(0)** (Figure 1A)
3. Remove the refill container by lifting upwards and outwards.
4. Refill the container with tap water.

! NOTE: Normal tap water can be used in the Vapor-Fire as long as the tap water is not considered to be hard water. In the event your tap water is hard, you may use softened water or distilled water with ⅙ tsp. of salt (0.5 mL) added to the water reservoir. (The use of additional salt should only be added if you notice that the unit is not producing mist as expected.)

5. Screw the cap back on, *do not overtighten*.
6. Return the refill container to the sump, with the tank cap facing down and the flat side of the tank facing outward.
7. Turn the On/Off switch to the off position **(I)**. (Figure 1A)
8. Gently place the top tray back into position.

If you do not intend on using the unit for longer than 2 weeks, empty and drain the unit of water, and dry all of the water containing components.

Transducer Replacement

After prolonged usage the ability for the unit to produce mist may become reduced. When this occurs the replacement of the transducer may be required. This unit comes with 2 additional transducers, located behind the right module, which can installed when this occurs.

! NOTE: There is a small tab that holds the transducer in place, that needs to be released before it can be removed.

Cleaning

It is recommended that the top cover assembly, sump and transducer are cleaned with soap and water on a ***biweekly*** basis.

⚠ **CAUTION:** Do not put plastic components in the dishwasher.

Filter Cleaning

The air filters can be removed and gently rinsed with water to clean and dried on a towel before reinstalling.

! NOTE: Replace the filter so that the course black filter is facing the back of the unit.

Surface Cleaning

Use a warm damp cloth only to clean surfaces of the unit. Do not use abrasive cleaners.

! NOTE: If you need to move the unit ensure that all of the components that contain water have been emptied before relocating.

Servicing

Except for installation and cleaning described in this manual, an authorized service representative should perform any other servicing.

Figure 4

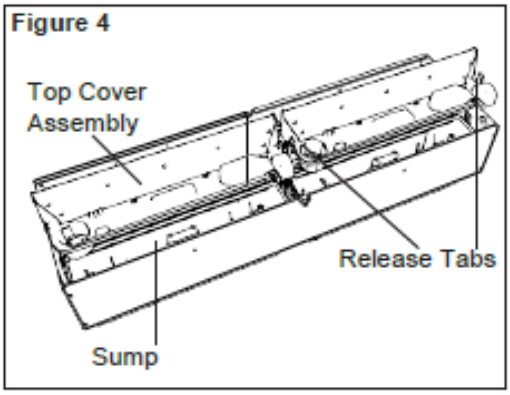

EXPLODED PARTS DIAGRAM

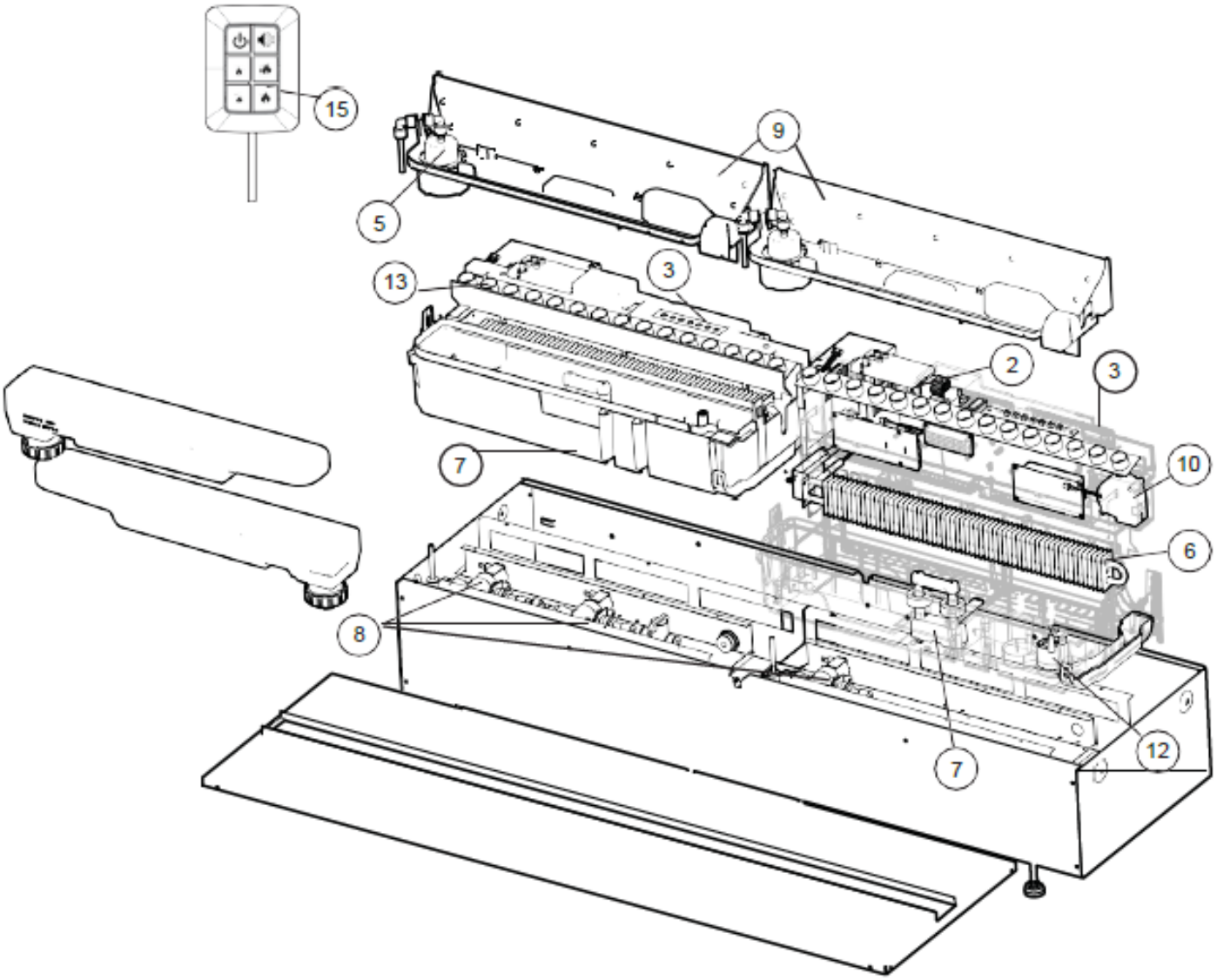

REPLACEMENT PARTS LIST

1. Main Control Board 9601270100RP
2. Terminal Block 9601260100RP
3. Switch Board 9601290100RP
4. Power Supply 9601300100RP
5. Fill Cap Assembly 9601230100RP
6. Heating Element 9601240100RP
7. Level Sensor Assembly 9601320100RP
8. Solenoid Valve 9601330100RP
9. Top Cover Assembly 9601220100RP
10. Fan Assembly 9601310100RP
11. Fan Filter 8600300100RP
12. Transducer 9601210100RP
13. LED Light Assembly 9601250100RP
14. N/A
15. Tethered Controller / Receiver 9601120100RP
16. Fused Wire harness 9601340100RP
17. Removable Refill Container with Cap . . 9601350100RP
18. Log set Assembly ..... CDFILOG-KIT
19. Plumbing Piercing Kit ..... CDFIPLUMB-KIT

WIRING DIAGRAM

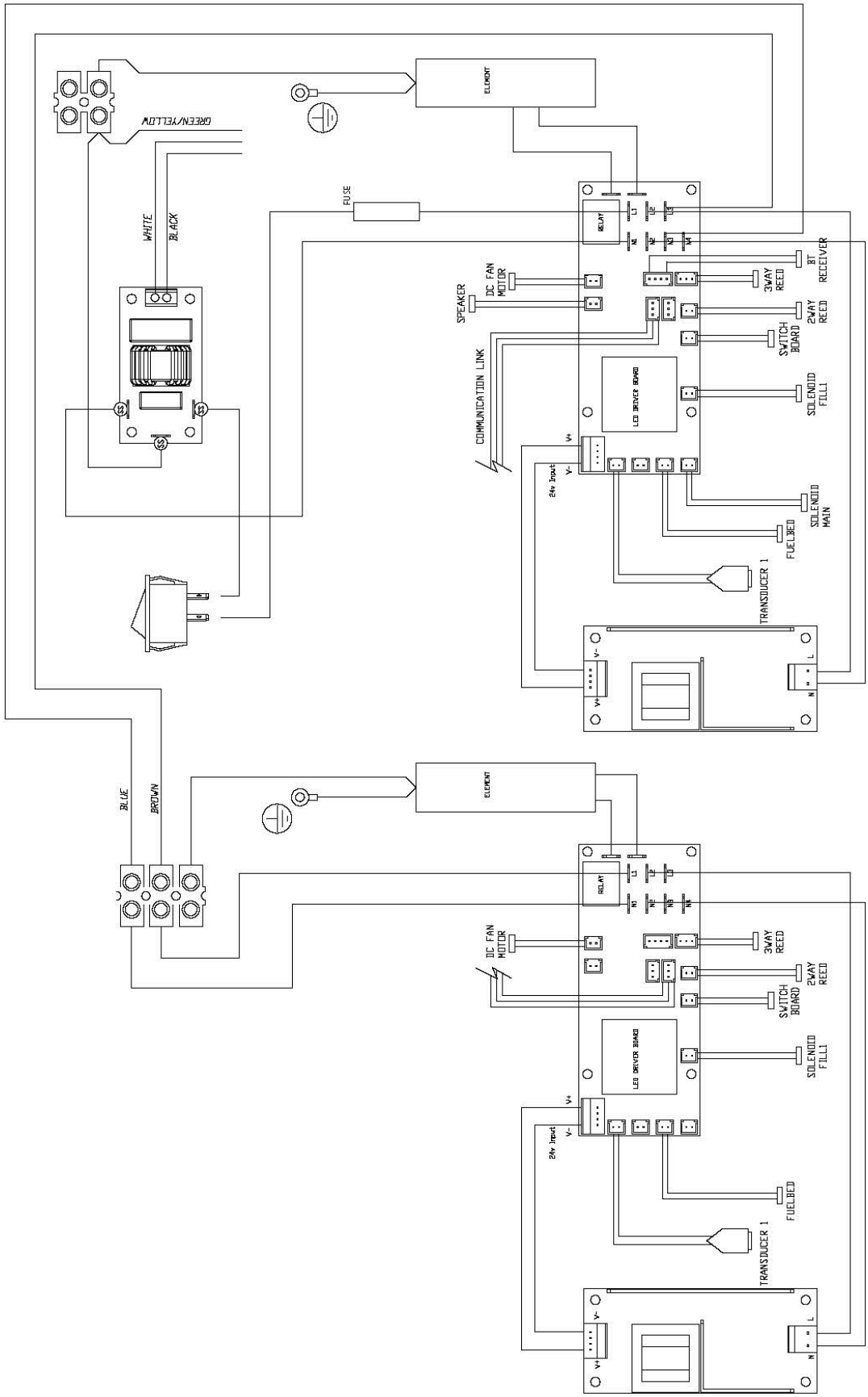

SWITCH BOARD REPLACEMENT

Tools Required: Phillips head screwdriver

⚠ **WARNING:** Disconnect power before attempting any maintenance to reduce the risk of electric shock or damage to persons.

! NOTE: Ensure that all of the components that contain water have been emptied and source water has been turned off before performing any maintenance.

1. Disconnect and remove the media tray or log set from the unit and put them in a safe place.
2. On the side the replacement is required, remove the securing screws and metal wire cover.
3. Remove the 4 screws and the electronics cover from the unit. (Figure 4)

! NOTE: Use caution when removing the electronics cover, to prevent strain on the connector wire attached to it.

4. Locate the switch board to be replaced.
5. Gently lift the switch board off of the mounting stands.
6. Disconnect the wire connection from the back of the board.
7. Attach the wire connection to the new board and place on the mounting stands.
8. Re-assemble the remainder of the cassette in reverse order from the instructions above.

TERMINAL BLOCK REPLACEMENT

Tools Required: Phillips head screwdriver

⚠ **WARNING:** Disconnect power before attempting any maintenance to reduce the risk of electric shock or damage to persons.

! NOTE: Ensure that all of the components that contain water have been emptied and source water has been turned off before performing any maintenance.

1. Disconnect and remove the media tray or log set from the unit and put them in a safe place.
2. On the secondary side remove the securing screws and metal wire cover.
3. Remove the 4 screws and the electronics cover from the unit. (Figure 4)

! NOTE: Use caution when removing the electronics cover, to prevent strain on the connector wire attached to it.

4. Locate the terminal block to be replaced.
5. Disconnect the wire connections from the original block and install it on the new block.
6. Replace the terminal block in the original position - the terminal block is located so that it sits on the moulded pins on the surface below.
7. Re-assemble the remainder of the cassette in reverse order from the instructions above.

Figure 4

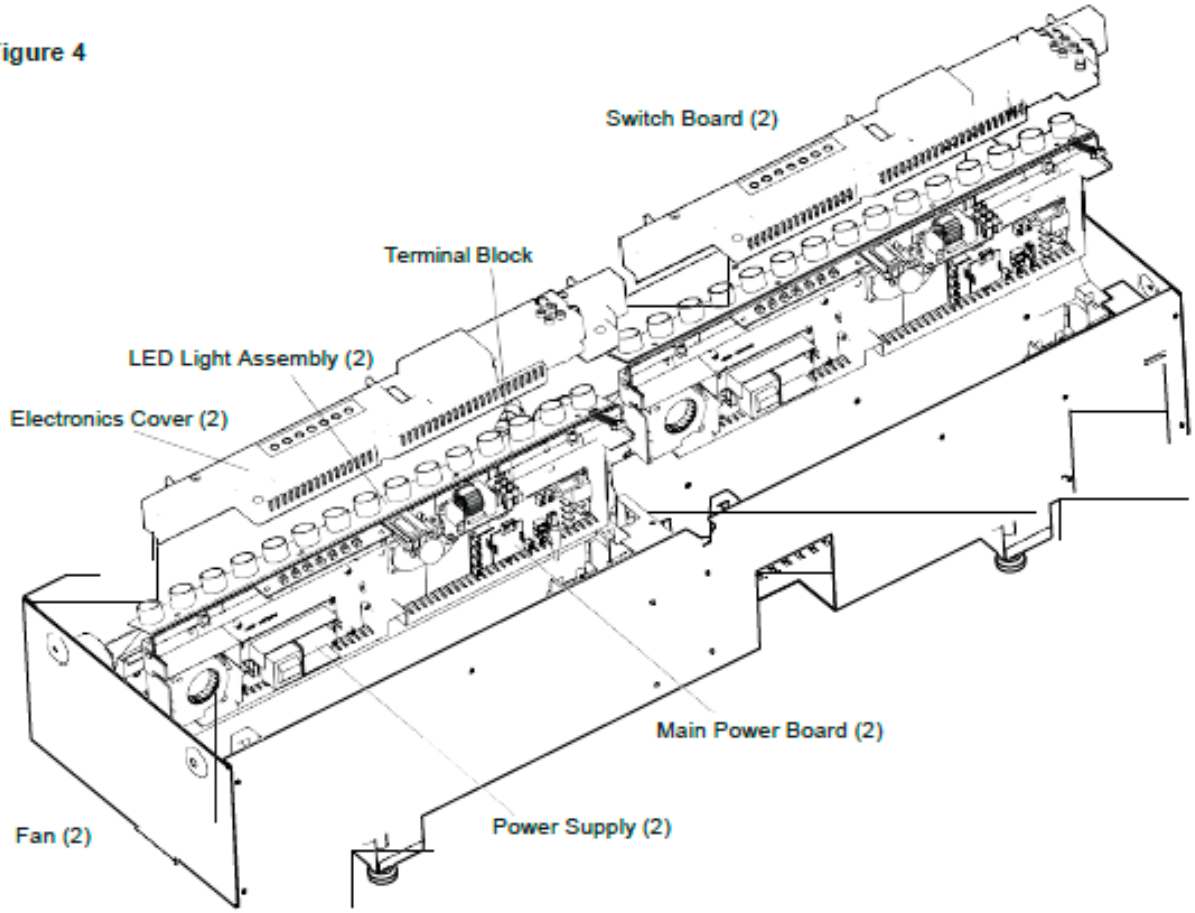

FAN ASSEMBLY REPLACEMENT

Tools Required: Phillips head screwdriver

⚠ **WARNING:** Disconnect power before attempting any maintenance to reduce the risk of electric shock or damage to persons.

! NOTE: Ensure that all of the components that contain water have been emptied and source water has been turned off before performing any maintenance.

Primary Side

1. Disconnect and remove the media tray or log set from the unit and put them in a safe place.
2. Remove the securing screws and metal wire cover at the end of both of the electronics covers.
3. Remove the 4 screws and both of the electronics covers from the unit. (Figure 4)

! NOTE: Use caution when removing the electronics cover, to prevent strain on the connector wire attached to it.

4. Holding the assembly at either end of the LED light strip, on the primary end, gently lift the electronics assembly out of the unit (Figure 4).

! NOTE: There are several wires that run between the two sides, these wires will need to be gently removed through the opening on the secondary side to allow the primary electronics assembly to be lifted out.

5. Locate the fan assembly.
6. Trace the control wires to the main control board and disconnect.
7. Replace with wire from new fan.
8. Run wiring back to location for fan, and install the fan.
9. Reinsert the electronics assembly.

⚠ **CAUTION:** Ensure that the switchboard and terminal block have not moved from their original locations and all wires are contained under the cover before reassembly.

10. Re-assemble the remainder of the cassette in reverse order from the instructions above.

Secondary Side

1. Disconnect and remove the media tray or log set from the unit and put them in a safe place.
2. Remove the 4 screws and the electronics cover from the unit. (Figure 4)

! NOTE: Use caution when removing the electronics cover, to prevent strain on the connector wire attached to it.

3. Holding the assembly at either end of the LED light strip, on the primary end, gently lift the electronics assembly out of the unit (Figure 4).
4. Locate the fan assembly.
5. Trace the control wires to the main control board and disconnect.
6. Replace with wire from new fan.
7. Run wiring back to location for fan, and install the fan.
8. Reinsert the electronics assembly.

⚠ **CAUTION:** Ensure that the switchboard and terminal block have not moved from their original locations and all wires are contained under the cover before reassembly.

9. Re-assemble the remainder of the cassette in reverse order from the instructions above.

FUSED WIRE HARNESS REPLACEMENT

Tools Required: Phillips head screwdriver

⚠ **WARNING:** Disconnect power before attempting any maintenance to reduce the risk of electric shock or damage to persons.

! NOTE: Ensure that all of the components that contain water have been emptied and source water has been turned off before performing any maintenance.

Primary Side

1. Disconnect and remove the media tray or log set from the unit and put them in a safe place.
2. Remove the securing screws and metal wire cover at the end of both of the electronics covers.
3. Remove the 4 screws and both of the electronics covers from the unit. (Figure 4)

! NOTE: Use caution when removing the electronics cover, to prevent strain on the connector wire attached to it.

4. Remove the cable clamp, to allow for the assembly to be lifted out to better access the components.
5. Holding the assembly at either end of the LED light strip, on the primary end, gently lift the electronics assembly out of the unit (Figure 4).

! NOTE: There are several wires that run between the two sides, these wires will need to be gently removed through the opening on the secondary side to allow the primary electronics assembly to be lifted out.

6. Locate the fused wire harness (brown wire from main switch to main control board with in line fuse).
7. Replace current wire harness with new wire harness.

! NOTE: A flat head screwdriver can be used to gently pry between the end of the connector and the switch to release the wires.

8. Replace all of the wiring to their original locations and reinsert the electronics assembly.

⚠ **CAUTION:** Ensure that the switchboard and terminal block have not moved from their original locations and all wires are contained under the cover before reassembly.

9. Re-assemble the remainder of the cassette in reverse order from the instructions above.

MAIN CONTROL BOARD REPLACEMENT

Tools Required: Phillips head screwdriver

⚠ **WARNING:** Disconnect power before attempting any maintenance to reduce the risk of electric shock or damage to persons.

! NOTE: Ensure that all of the components that contain water have been emptied and source water has been turned off before performing any maintenance.

Primary Side

1. Disconnect and remove the media tray or log set from the unit and put them in a safe place.
2. Remove the securing screws and metal wire cover at the end of both of the electronics covers.
3. Remove the 4 screws and both of the electronics covers from the unit. (Figure 4)

! NOTE: Use caution when removing the electronics cover, to prevent strain on the connector wire attached to it.

4. Remove the cable clamp, to allow for the assembly to be lifted out to better access the components.
5. Holding the assembly at either end of the LED light strip, on the primary end, gently lift the electronics assembly out of the unit (Figure 4).

! NOTE: There are several wires that run between the two sides, these wires will need to be gently removed through the opening on the secondary side to allow the primary electronics assembly to be lifted out.

6. Locate the main control board.
7. Transfer the wires from the old board to the new board.

! NOTE: A flat head screwdriver can be used to gently pry between the end of the connector and the switch to release the wires.

8. Remove the old board from the unit and replace with the new board.
9. Replace all of the wiring to their original locations and reinsert the electronics assembly.

⚠ **CAUTION:** Ensure that the switchboard and terminal block have not moved from their original locations and all wires are contained under the cover before reassembly.

10. Re-assemble the remainder of the cassette in reverse order from the instructions above.

Secondary Side

1. Disconnect and remove the media tray or log set from the unit and put them in a safe place.
2. Remove the 4 screws and the electronics cover from the unit. (Figure 4)

! NOTE: Use caution when removing the electronics cover, to prevent strain on the connector wire attached to it.

3. Holding the assembly at either end of the LED light strip, on the primary end, gently lift the electronics assembly out of the unit (Figure 4).
4. Locate the main control board.
5. Transfer the wires from the old board to the new board.

! NOTE: A flat head screwdriver can be used to gently pry between the end of the connector and the switch to release the wires.

6. Remove the old board from the unit and replace with the new board.
7. Replace all of the wiring to their original locations and reinsert the electronics assembly.

⚠ **CAUTION:** Ensure that the switchboard and terminal block have not moved from their original locations and all wires are contained under the cover before reassembly.

8. Re-assemble the remainder of the cassette in reverse order from the instructions above.

POWER SUPPLY REPLACEMENT

Tools Required: Phillips head screwdriver

⚠ **WARNING:** Disconnect power before attempting any maintenance to reduce the risk of electric shock or damage to persons.

! NOTE: Ensure that all of the components that contain water have been emptied and source water has been turned off before performing any maintenance.

Primary Side

1. Disconnect and remove the media tray or log set from the unit and put them in a safe place.
2. Remove the securing screws and metal wire cover at the end of both of the electronics covers.
3. Remove the 4 screws and both of the electronics covers from the unit. (Figure 4)

! NOTE: Use caution when removing the electronics cover, to prevent strain on the connector wire attached to it.

4. Remove the cable clamp, to allow for the assembly to be lifted out to better access the components.
5. Holding the assembly at either end of the LED light strip, on the primary end, gently lift the electronics assembly out of the unit (Figure 4).

! NOTE: There are several wires that run between the two sides, these wires will need to be gently removed through the opening on the secondary side to allow the primary electronics assembly to be lifted out.

6. Locate the power supply assembly.
7. Transfer the wires from the old board to the new board.

! NOTE: A flat head screwdriver can be used to gently pry between the end of the connector and the switch to release the wires.

8. Remove the old board from the unit and replace with the new board.
9. Replace all of the wiring to their original locations and reinsert the electronics assembly.

⚠ **CAUTION:** Ensure that the switchboard and terminal block have not moved from their original locations and all wires are contained under the cover before reassembly.

10. Re-assemble the remainder of the cassette in reverse order from the instructions above.

Secondary Side

1. Disconnect and remove the media tray or log set from the unit and put them in a safe place.
2. Remove the 4 screws and the electronics cover from the unit. (Figure 4)

! NOTE: Use caution when removing the electronics cover, to prevent strain on the connector wire attached to it.

3. Holding the assembly at either end of the LED light

strip, on the primary end, gently lift the electronics assembly out of the unit (Figure 4).

4. Locate the power supply assembly.
5. Transfer the wires from the old board to the new board.

! NOTE: A flat head screwdriver can be used to gently pry between the end of the connector and the switch to release the wires.

6. Remove the old board from the unit and replace with the new board.
7. Replace all of the wiring to their original locations and reinsert the electronics assembly.

⚠ CAUTION: Ensure that the switchboard and terminal block have not moved from their original locations and all wires are contained under the cover before reassembly.

8. Re-assemble the remainder of the cassette in reverse order from the instructions above.

LED LIGHT ASSEMBLY REPLACEMENT

Tools Required: Phillips head screwdriver

⚠ WARNING: Disconnect power before attempting any maintenance to reduce the risk of electric shock or damage to persons.

! NOTE: Ensure that all of the components that contain water have been emptied and source water has been turned off before performing any maintenance.

Primary Side

1. Disconnect and remove the media tray or log set from the unit and put them in a safe place.
2. Remove the securing screws and metal wire cover at the end of both of the electronics covers.
3. Remove the 4 screws and both of the electronics covers from the unit. (Figure 4)

! NOTE: Use caution when removing the electronics cover, to prevent strain on the connector wire attached to it.

4. Remove the cable clamp, to allow for the assembly to be lifted out to better access the components.
5. Holding the assembly at either end of the LED light strip, on the primary end, gently lift the electronics assembly out of the unit (Figure 4).

! NOTE: There are several wires that run between the two sides, these wires will need to be gently removed through the opening on the secondary side to allow the primary electronics assembly to be lifted out.

6. Gently lift the LED light assembly off of the standoffs.
7. Trace the control wire back to the main control board and replace with the wire from the new assembly.
8. Install the new LED light assembly, ensuring that all of the wires are installed in the same location as the previous one.
9. Replace all of the wiring to their original locations and reinsert the electronics assembly.

⚠ CAUTION: Ensure that the switchboard and terminal block have not moved from their original locations and all wires are contained under the cover before reassembly.

10. Re-assemble the remainder of the cassette in reverse order from the instructions above.

Secondary Side

1. Disconnect and remove the media tray or log set from the unit and put them in a safe place.
2. Remove the 4 screws and the electronics cover from the unit. (Figure 4)

! NOTE: Use caution when removing the electronics cover, to prevent strain on the connector wire attached to it.

3. Holding the assembly at either end of the LED light strip, on the primary end, gently lift the electronics assembly out of the unit (Figure 4).
4. Gently lift the LED light assembly off of the standoffs.
5. Trace the control wire back to the main control board and replace with the wire from the new assembly.
6. Install the new LED light assembly, ensuring that all of the wires are installed in the same location as the previous one.
7. Replace all of the wiring to their original locations and reinsert the electronics assembly.

⚠ CAUTION: Ensure that the switchboard and terminal block have not moved from their original locations and all wires are contained under the cover before reassembly.

8. Re-assemble the remainder of the cassette in reverse order from the instructions above.

HEATING ELEMENT REPLACEMENT

Tools Required: Phillips head screwdriver

⚠ WARNING: Disconnect power before attempting any maintenance to reduce the risk of electric shock or damage to persons.

! NOTE: Ensure that all of the components that contain water have been emptied and source water has been turned off before performing any maintenance.

Primary Side

1. Disconnect and remove the media tray or log set from the unit and put them in a safe place.
2. Remove the securing screws and metal wire cover at the end of both of the electronics covers.
3. Remove the 4 screws and both of the electronics covers from the unit. (Figure 4)

! NOTE: Use caution when removing the electronics cover, to prevent strain on the connector wire attached to it.

4. Remove the cable clamp, to allow for the assembly to be lifted out to better access the components.
5. Holding the assembly at either end of the LED light strip, on the primary end, gently lift the electronics assembly out of the unit (Figure 4).

! NOTE: There are several wires that run between the two sides, these wires will need to be gently removed through the opening on the secondary side to allow the primary electronics assembly to be lifted out.

6. Locate the 2 screws that secure the element assembly (element and brackets) to the unit and remove.
7. Lift the element assembly out of the unit.
8. Disconnect the element from the main control board.
9. Remove the element from the mounting bracket and install the new element.
10. Attach the new element to the main control board.
11. Install and secure the element assembly into the unit.
12. Replace all of the wiring to their original locations and reinsert the electronics assembly.

⚠ **CAUTION:** Ensure that the switchboard and terminal block have not moved from their original locations and all wires are contained under the cover before reassembly.

13. Re-assemble the remainder of the cassette in reverse order from the instructions above.

Secondary Side

1. Disconnect and remove the media tray or log set from the unit and put them in a safe place.
2. Remove the 4 screws and the electronics cover from the unit. (Figure 4)

! NOTE: Use caution when removing the electronics cover, to prevent strain on the connector wire attached to it.

3. Holding the assembly at either end of the LED light strip, on the primary end, gently lift the electronics assembly out of the unit (Figure 4).
4. Locate the 2 screws that secure the element assembly (element and brackets) to the unit and remove.
5. Lift the element assembly out of the unit.
6. Disconnect the element from the main control board.
7. Remove the element from the mounting bracket and install the new element.
8. Attach the new element to the main control board.
9. Install and secure the element assembly into the unit.
10. Replace all of the wiring to their original locations and reinsert the electronics assembly.

⚠ **CAUTION:** Ensure that the switchboard and terminal block have not moved from their original locations and all wires are contained under the cover before reassembly.

11. Re-assemble the remainder of the cassette in reverse order from the instructions above.

LEVEL SENSOR ASSEMBLY REPLACEMENT

Tools Required: Phillips head screwdriver

⚠ **WARNING:** Disconnect power before attempting any maintenance to reduce the risk of electric shock or damage to persons.

! NOTE: Ensure that all of the components that contain water have been emptied and source water has been turned off before performing any maintenance.

Primary Side

1. Disconnect and remove the media tray or log set from the unit and put them in a safe place.
2. Remove the securing screws and metal wire cover at the end of both of the electronics covers.
3. Remove the 4 screws and both of the electronics covers from the unit. (Figure 4)

! NOTE: Use caution when removing the electronics cover, to prevent strain on the connector wire attached to it.

4. Remove the cable clamp, to allow for the assembly to be lifted out to better access the components.
5. Holding the assembly at either end of the LED light strip, on the primary end, gently lift the electronics assembly out of the unit (Figure 4).

! NOTE: There are several wires that run between the two sides, these wires will need to be gently removed through the opening on the secondary side to allow the primary electronics assembly to be lifted out.

6. Remove the refill bottle, top cover, transducer and sump.
7. Locate the level sensor assembly. (Figure 5)
8. Trace and disconnect the control wire for the level sensor assembly back to the main control board.
9. Depress the two tabs along the one side of the assembly and slide the level sensor and wire out.

Figure 5

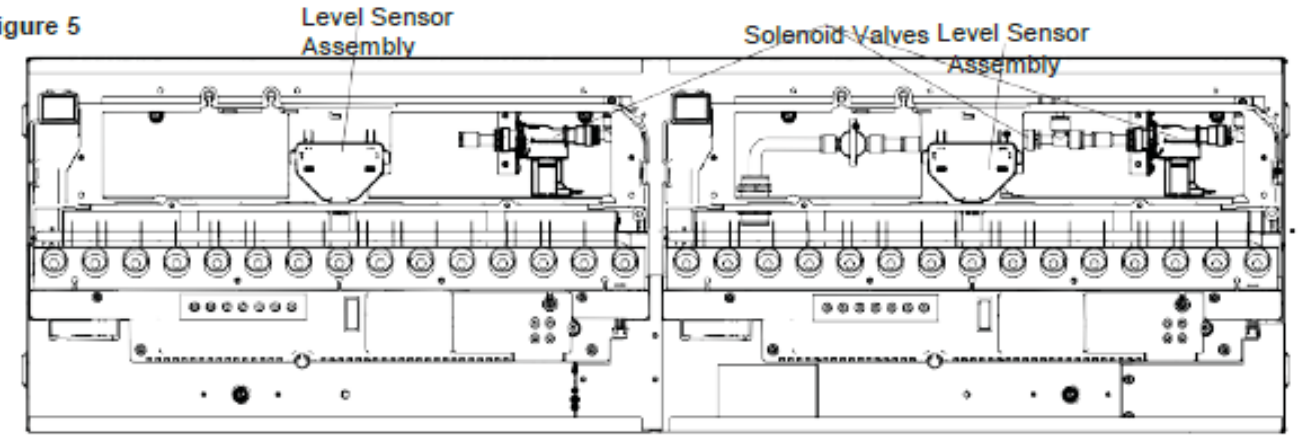

10. Run new wire through to main control board.
11. Install new level sensor.
12. Reconnect the control wire.

⚠ **CAUTION:** Ensure that the switchboard and terminal block have not moved from their original locations and all wires are contained under the cover before reassembly.

13. Re-assemble the remainder of the cassette in reverse order from the instructions above.

Secondary Side

1. Disconnect and remove the media tray or log set from the unit and put them in a safe place.
2. Remove the 4 screws and the electronics cover from the unit. (Figure 4)

! NOTE: Use caution when removing the electronics cover, to prevent strain on the connector wire attached to it.

3. Holding the assembly at either end of the LED light strip, on the primary end, gently lift the electronics assembly out of the unit (Figure 4).
4. Remove the refill bottle, top cover, transducer and sump.
5. Locate the level sensor assembly. (Figure 5)
6. Trace and disconnect the control wire for the level sensor assembly back to the main control board.
7. Depress the two tabs along the one side of the assembly and slide the level sensor and wire out.
8. Run new wire through to main control board.
9. Install new level sensor.
10. Reconnect the control wire.

⚠ **CAUTION:** Ensure that the switchboard and terminal block have not moved from their original locations and all wires are contained under the cover before reassembly.

11. Re-assemble the remainder of the cassette in reverse order from the instructions above.

SOLENOID VALVE REPLACEMENT

Tools Required: Short Phillips head screwdriver

⚠ **WARNING:** Disconnect power before attempting any maintenance to reduce the risk of electric shock or damage to persons.

! NOTE: Ensure that all of the components that contain water have been emptied and source water has been turned off before performing any maintenance.

Primary Side

1. Disconnect and remove the media tray or log set from the unit and put them in a safe place.
2. Remove the securing screws and metal wire cover at the end of both of the electronics covers.
3. Remove the 4 screws and both of the electronics covers from the unit. (Figure 4)

! NOTE: Use caution when removing the electronics cover, to prevent strain on the connector wire attached to it.

4. Remove the cable clamp, to allow for the assembly to be lifted out to better access the components.
5. Holding the assembly at either end of the LED light strip, on the primary end, gently lift the electronics assembly out of the unit (Figure 4).

! NOTE: There are several wires that run between the two sides, these wires will need to be gently removed through the opening on the secondary side to allow the primary electronics assembly to be lifted out.

6. Remove the refill bottle, top cover, transducer and sump.
7. Locate the solenoid valve to be replaced. (Figure 5)
8. Trace and disconnect the control wire for the solenoid back to the main control board.
9. Remove the two screws from the front face of the bracket to release the valve.
10. Disconnect the plumbing connections and remove the solenoid valve.
11. Run new wire through to main control board.
12. Install new solenoid valve.
13. Reconnect the control wire.

⚠ **CAUTION:** Ensure that the switchboard and terminal block have not moved from their original locations and all wires are contained under the cover before reassembly.

14. Re-assemble the remainder of the cassette in reverse order from the instructions above.

Secondary Side

1. Disconnect and remove the media tray or log set from the unit and put them in a safe place.
2. Remove the 4 screws and the electronics cover from the unit. (Figure 4)

! NOTE: Use caution when removing the electronics cover, to prevent strain on the connector wire attached to it.

3. Holding the assembly at either end of the LED light strip, on the primary end, gently lift the electronics assembly out of the unit (Figure 4).
4. Remove the refill bottle, top cover, transducer and sump.
5. Locate the solenoid valve to be replaced. (Figure 5)
6. Trace and disconnect the control wire for the solenoid back to the main control board.
7. Remove the two screws from the front face of the bracket to release the valve.
8. Disconnect the plumbing connections and remove the solenoid valve.
9. Run new wire through to main control board.
10. Install new solenoid valve.
11. Reconnect the control wire..

⚠ **CAUTION:** Ensure that the switchboard and terminal block have not moved from their original locations and all wires are contained under the cover before reassembly.

12. Re-assemble the remainder of the cassette in reverse order from the instructions above.

TROUBLESHOOTING GUIDE

***** After the unit has shut down due to an error, a full reset of the unit will be required by turning the unit Off with the On/Off switch for 60 seconds then turning back On.***

PROBLEM	CAUSE	SOLUTION
General		
Unpleasant smell when unit is used.	Dirty or stale water.	Clean the unit as described under maintenance.
Appearance		
Fireplace does not turn on Manually (unit does not beep when switch turned)	Improper operation	Refer to Operation Section
	No incoming voltage from the electrical wall socket	Check Fuse/Breaker Panel
	Defective main control board	Replace main control board
Only one side of the unit is operating	Tethered controller not installed correctly	Ensure that connection has clicked into place
	Put unit in troubleshooting mode to test any of the functions listed	If none of the tests are working, replace the main control board
Fireplace does not turn on with the Remote Control	Improper operation	Refer to Operation Section
	The batteries in the remote control are dead	Install new battery into the remote control
	Tethered controller not installed correctly	Ensure that connection has clicked into place
	Remote not initialized with the unit	Initialize remote to unit. Unit will flash on and off during initialization, completion will be indicated with 5 beeps
	Remote signal is not being received by tethered controller	Ensure that tethered controller is in an open area that can receive signal from remote control
	Defective remote control (blue light on end of remote does not turn on when buttons are pressed)	Replace remote control
	Defective tethered controller	Replace tethered controller
	Defective remote control	Replace remote control
The flame effect has too much smoke or is coming out too fast	Flame effect control is set too high	Adjust the flame height on both the secondary and/or primary controls
	Filter is missing off of Fan Housing	Replace Fan Filter
Mist is not coming out evenly	Condensation building up on the mist outlet	Remove the build up of condensation
	Unit is not level	Adjust the feet under the unit to ensure that the unit has been installed level, front to back and side to side
	Media is blocking air flow	Rearrange media to ensure mist outlet is not being blocked
	The transducer is not operating correctly - put the unit in troubleshooting mode to test the transducer	If the transducer is running, ensure that the emitter is clean and free of calcium deposits or scaling
		If the transducer is not running, replace the transducer with the provided additional transducer
The flame effect is too low	Flame effect control is set too low	Adjust the flame height on both the secondary and/or primary controls
	Verify that the unit is receiving 72 in^2 (460 cm^2) of air	Enlarge area for air to enter unit
	The fan is not operating correctly - put unit in troubleshooting mode to test the fan	If the fan is not running, replace fan assembly
		If the fan is running, ensure that the air filter is clean and dry
	The heating element is not operating correctly - put unit in troubleshooting mode to test the operation of the heating element	Replace the heating element
Unit is blinking every 8 seconds and is not operating	Water level in reservoir is too high **	Remove enough water from reservoir so that level is below maximum level
	The solenoids are not operating correctly - put unit in troubleshooting mode to test the operation of the solenoids	If the solenoids are not working, replace the solenoid

PROBLEM	CAUSE	SOLUTION
Appearance Continued		
Flame effect will not start - unit being operated with *refill bottle*	Improper operation	Mist will begin emitting out of the unit after 45 seconds of operation
	Low water level indicator and lights continuously blink twice **	Turn the unit off with the On/Off switch, refill the refill container and turn the unit back on
		Ensure that water bottle is level and positioned so that the water can easily flow to the water reservoir
		Manually fill the reservoir to the maximum line and if issues persists replace the level sensor assembly
	Water in unit is too cold	Allow water to warm to room temperature.
	Cord is located over emitter on transducer	Relocate cord so that mist is free to rise off of transducer.
	Transducer is not installed correctly	Ensure that the connection has clicked into place
	If using distilled or reverse osmosis water, unit will not produce a consistent mist	Add 1/8 tsp of table salt to water reservoir to introduce electrolytes, only repeat when mist is not being produced correctly
	The transducer is not operating correctly - put the unit in troubleshooting mode to test the transducer	If the transducer is running, ensure that the emitter is clean and free of calcium deposits or scaling
		If the transducer is not running, replace the transducer with the provided additional transducer
	The fan is not operating correctly - put unit in troubleshooting mode to test the fan	If the fan is not running, replace fan assembly
		If the fan is running, ensure that the air filter is clean and dry
	The heating element is not operating correctly	Replace the heating element
Flame effect will not start - unit *hard plumbed* to water source	Improper operation	Mist will begin emitting out of the unit after 45 seconds of operation
	Transducer is not installed correctly	Ensure that the connection has clicked into place
	Cord is located over emitter on transducer	Relocate cord so that mist is free to rise off of transducer.
	Low water level indicator and lights continuously blink twice **	Turn the unit off with the On/Off switch, remove the top cover assembly, verify that ball valve is open, none of the water connections are leaking and supply water has not been turned off
		Manually fill the reservoir to the maximum line and if issues persists replace the level sensor assembly
	The solenoids are not operating correctly - put unit in troubleshooting mode to test the operation of the solenoids	If the solenoids are not working, replace the solenoid
	The transducer is not operating correctly - put the unit in troubleshooting mode to test the transducer	If the transducer is running, ensure that the emitter is clean and free of calcium deposits or scaling
		If the transducer is not running, replace the transducer with the provided additional transducer
	The fan is not operating correctly - put unit in troubleshooting mode to test the fan	If the fan is not running, replace fan assembly
		If the fan is running, ensure that the air filter is clean and dry
Water is appearing around the unit	During normal operation it is expected to see some condensation of water on the media tray.	If condensation is present ensure that mist outlets are unobstructed
		Certain ambient conditions will cause condensation on the unit and in most cases will only occur on initial start up of the unit
Water is appearing beneath unit	Connections are leaking	Ensure that all water connections are tight and fully inserted
	Incoming water pressure is too high (only applicable on hard plumbed units)	Reduce water pressure to below 58 psi (8 bar)

PROBLEM	CAUSE	SOLUTION
Appearance Continued		
Unit is blinking every 8 seconds and is not operating	Water level in reservoir is too high **	Remove enough water from reservoir so that level is below maximum level
	The solenoids are not operating correctly - put unit in troubleshooting mode to test the operation of the solenoids	If the solenoids are not working, replace the solenoid
LED lights do not come on when unit is turned on	Defective LED light strip - put unit in troubleshooting mode to test the LED lights	Replace LED Light strip

Troubleshooting Mode

The unit has a built-in troubleshooting mode to assist with determination of issues.

To put the unit in troubleshooting mode:

1. Place the unit in standby off (the toggle switch in the On position and everything else Off).
2. Press the troubleshooting button (Figure 1D) on the side that the testing is required, unit will beep.
3. Press the following buttons to test functionality of listed components - press once will turn On and press again to turn off

	Component Test	Expected Functionality
	LED Driver	Lights turn On
	Sound	Crackling sound will turn On
	Fan	Fan will turn On
	Transducer	Transducer will turn On and bubbling will be seen coming out of the transducer
	Solenoids	Solenoids will turn On (the main solenoid coming in and the solenoid on the side being tested)
	Heater Relay	Relays will be activated to turn the heating element on, a quiet clicking noise can be heard
	Fuel Bed	LED's in fuel bed will turn On

4. After 15 seconds of inactivity the unit will beep and then return to regular Standby mode, or the On/Off button can be switched to Off to end the troubleshooting mode.

VAPOR-FIRE Systems

are Design Built by CF + D custom fireplace design inc.
Engines provided by Dimplex North America Ltd.

CF + D | custom fireplace design
5230 Harvester Rd. Unit #2 Burlington, Ontario Canada
L7L 4X4 t. 1-866-909-3070 t. 905-681-3070
www.customfireplacedesign.com