INSTALLATION | OWNER'S MANUAL



Image shown is for illustration purpose and may include some optional features.

VITA | Fireplaces

AIDAN See-Thru | Suspended Gas Fireplace

MODEL

PMG-1290-AIDAN

SERIAL NO.

YYMMDD-VADO2XX-XXXXXX

Fireplace has been tested and certified to meet the standards of:
ANSI Z21.50:19 - CSA 2.22:19
Vented Decorative Gas Appliances
Certified under : ICC-ES PMG-1290

INSTALLER: Leave this manual with the appliance.
CONSUMER: Retain this manual for future reference.

⚠ WARNING:
FIRE OR EXPLOSION HAZARD
Failure to follow safety exactly could result in serious injury, death, or property damage.

- **Do not store or use gasoline or other flammable vapors and liquids in the vicinity of this or any other appliance.**
- **WHAT TO DO IF YOU SMELL GAS**
- **Do not try to light any appliance.**
- **Do not touch any electrical switch; do not use any phone in your building.**
- **Leave the building immediately.**
- **Immediately call your gas supplier from a neighbor's phone. Follow the gas supplier's instructions**
- **If you cannot reach your gas supplier, call the fire department.**
- **Installation and service must be performed by a qualified installer, service agency or the gas supplier.**

This appliance may be installed in an aftermarket, permanently located, manufactured home (USA only) or mobile home, where not prohibited by local codes.

This appliance is only for use with the type of gas indicated on the rating plate. This appliance is not convertible for use with other gases.

The installation must conform with local codes or, in the absence of local codes, to the National Fuel Gas Code, ANSI 2223.1/NFPA 54, or the Natural Gas and Propane Installation Code, CSA B149.1.

FOR USE WITH GLASS DOORS CERTIFIED WITH THE APPLIANCE ONLY

IMPORTANT: Read this owner's manual thoroughly before trying to assemble, operate, or service this Fireplace. Improper use of this unit can cause serious injury or death from burns, fire, explosion, electrical shock, and carbon monoxide poisoning.

WARNING: Improper installation, adjustment, alteration, service, or maintenance can cause injury or property damage. Refer to the owner's information manual provided with this.

CF + D | Custom Fireplace Design Inc.
5230 Harvester Rd #2, Burlington, ON L7L 4X4
T. 1-866-909-3070 t. 905-681-3070. www.customfireplacedesign.com

REV. 02 01/03/2022

FIREPLACE SAFETY INSTRUCTIONS

VENTED DECORATIVE GAS APPLIANCE: NOT A SOURCE OF HEAT; NOT FOR USE WITH SOLID FUEL.

CAUTION: HOT WHILE IN OPERATION. DO NOT TOUCH. SEVERE BURNS MAY RESULT. KEEP CHILDREN, CLOTHING, FURNITURE, GASOLINE AND OTHER LIQUIDS HAVING FLAMMABLE VAPORS AWAY. APPLIANCE. FOR ASSISTANCE OR ADDITIONAL INFORMATION, CONSULT A QUALIFIED INSTALLER, SERVICE AGENCY, OR THE GAS SUPPLIER.

WARNING: PROVISIONS FOR ADEQUATE COMBUSTION AND VENTILATION AIR MUST BE PROVIDED.

WARNING: THE APPLIANCE MUST NOT BE CONNECTED TO A CHIMNEY FLUE SERVING A SEPARATE SOLID-FUEL BURNING APPLIANCE.

WARNING: PROVISIONS FOR ADEQUATE COMBUSTION AND VENTILATION AIR MUST BE PROVIDED.

DANGER: Carbon monoxide poisoning may lead to death! Carbon Monoxide Poisoning: Early signs of carbon monoxide poisoning resemble the flu, with headaches, dizziness, or nausea. If you have these signs, the fireplace may not be working properly. Get fresh air at once! Have fireplace serviced. Some people are more affected by carbon monoxide than others. These include pregnant women, people with heart or lung disease or anemia, those under the influence of alcohol, and those at high altitudes.

WARNING: KEEP FLUE OPEN WHEN OPERATING UNIT.

WARNING: ANY CHANGE TO THIS FIREPLACE OR ITS CONTROLS CAN BE DANGEROUS.

Due to high temperatures, the appliance should be located out of traffic and away from furniture and draperies.

Children and adults should be alerted to the hazards of high surface temperature and should stay away to avoid burns or clothing ignition.

Young children should be carefully supervised when they are in the same room as the appliance. Toddlers, young children, and others may be susceptible to accidental contact burns. A physical barrier is recommended if there are at-risk individuals in the house. To restrict access to a fireplace or stove, install an adjustable safety gate to keep toddlers, young children, and other at-risk individuals out of the room and away from hot surfaces.

Do not use this appliance if any part has been under water. Immediately call a qualified service technician to inspect the appliance and to replace any part of the control which has been under water.

Installation and repair should be done by a qualified service person. The appliance should be inspected before use and at least annually by a professional service person. More frequent cleaning may be required due to excessive lint from carpeting, bedding material, etcetera. It is imperative that control compartments, burners, and circulating air passageways of the appliance be kept clean.

This gas appliance and its main gas valve must be disconnected from the gas-supply system during any pressure testing of that system at test pressures in excess of 1/2 psig. The appliance must be isolated from the gas supply piping system by closing the equipment shut-off valve during any pressure testing of the gas supply piping system at test pressures equal to or less than 1/2 psi (3.5 kpa).

Keep burner and control; compartment clean. See installation and operating instructions accompanying appliance.

For use only with automatic vent damper Part No. 201.0000.1206. Follow installation instructions.

Venting terminals shall not be recessed into a wall or siding.

In Canada, also certified for installation in a bedroom or bedsitting room.

FIREPLACE SAFETY INSTRUCTIONS

Any safety screen, guard, or barrier removed for servicing an appliance must be replaced prior to operating the appliance.

Clothing or other flammable material should not be placed on or near the appliance.

When the appliance is installed directly on carpeting, tile, or other combustible material other than wood flooring, the appliance shall be installed on a metal or wood panel extending the full width and depth of the appliance.

Damper must be in open position when appliance main burner(s) is operating.

Do not remove the rating plates or the warning tags. These are an integral safety and identification component of this appliance.

Gas may be present even though no odor exists. Make certain you read and understand all warnings. Keep this manual for reference. It is your guide to safe and proper operation of this fireplace.

Fireplace is designed to be smokeless. If it ever appears to smoke, turn off appliance and call a qualified service person. However, during initial operation, slight smoking could occur due to unit curing and the burning of manufacturing residues.

Do not allow fans to blow directly into the fireplace. Avoid any drafts that alter burner flame patterns, as it could increase sooting

Do not burn solid fuel in the fireplace after installing the fireplace. Do not use this appliance to cook food or burn paper or other objects.

Insufficient Gas pressure will keep the pilot (if equipped) from operating properly. Do not use if Gas pressure is lower than the minimum requirement.

Input ratings shown in BTU per hour are for elevations up to 2,000 ft., refer to the National Fuel Gas Code or contact manufacturer before installing this product.

Contact local building or fire officials about restrictions and installation inspection requirements in your area. The authority having jurisdiction should be consulted before installation to determine the need to obtain a permit (*such as Municipal Building Department, Fire Department, Fire Prevention Bureau, etc.*).

Only high heat Silicone must be used to seal each connection points and/or area.

Chimney, Venting, Burner area and all other important areas of the fireplace shall be kept in good condition and clean.

The height of the chimney vent must extend a minimum of 2ft. above the highest point where it passes through the roof for Vertical Termination.

The access door area of the fireplace may be hot to touch for normal operational activities. Please turn off the fireplace and let it cool down before performing any operation over hot surfaces.

TABLE OF CONTENTS

APPENDIX-A

1. General Information..... Page 1
2. Letter From the President..... Page 2
3. Fireplace Component Breakdown..... Page 3
4. Rating Plate..... Page 4
5. Installation Requirements..... Page 5
6. Vertical Termination..... Page 6
   - » Fireplace Specifications..... Page 7
   - » Anchor options diagram..... Page 9
   - » Clearance to Combustibles..... Page 10
   - » Enervex Electrical diagram..... Page 11
7. Horizontal Termination..... Page 12
   - » Fireplace Specifications..... Page 13
   - » Anchor options diagram..... Page 15
   - » Clearance to Combustibles..... Page 16
   - » Enervex Electrical diagram..... Page 17
8. Fireplace Installation..... Page 18

APPENDIX-B

1. Burner Installation | Operation..... Page 27
2. Lighting Instructions..... Page 28
3. Chimney | Venting Installation & Operation..... Page 29
4. Cleaning | Maintenance..... Page 32
5. Replacements & Closing..... Page 33
6. Warranty..... Page 34
7. Enervex Intelli Draft System.....
   - » ADC100 w/ PDS-1
   - » Automatic Damper
   - » Power Exhaust Fan

APPENDIX-A

GENERAL INFORMATION

KEEP THIS MANUAL HANDY FOR EASY REFERRAL.

All **NOTES**, **WARNING,** and **CAUTION** statements will appear in bold font and/or uppercase letters:
THEY SHOULD BE STRICTLY OBSERVED.

This installation manual is to serve as a guidebook to the installation of your fireplace system. It is not intended to replace skilled trades and/or expertise that may be required to perform installations. All chimney components must be installed by qualified persons in accordance with local building codes and chimney and vent system manuals. Components described herein are intended as an indication of the components required and/or supplied.

All standard safety practices as indicated by local codes, laws, or OSHA standards must be followed to prevent accident or injury. Some of the components supplied cannot be installed by a single person nor should they be installed from a ladder. All site safety arrangements are the responsibility of the Site Supervisor, General Contractor and/or Fireplace Installers, and not CF + D.

USING MAKE-SHIFT COMPROMISES DURING INSTALLATION CAN CAUSE DAMAGE.

Such an installation is not covered under CF + D limited warranty.

DO NOT CONNECT TO ANY AIR DISTRIBUTION DUCT OR SYSTEM!

CF + D specializes in creating one-of-a-kind, hand-made artistic fireplaces. While these fire features are generally developed for their aesthetic presence they are also a functional heating appliance. As such, natural variations in the material forming processes and patina are part of the sculptural spirit of the fireplace, adding to the beauty and uniqueness of the design.

Thank you for choosing **CF** + **D** | Custom Fireplace Design

A LETTER FROM OUR PRESIDENT

CF + D | custom fireplace design

Quality Creativity Innovation

Our entire team joins me in thanking you for purchasing this AIDAN See-Thru | Suspended Gas Fireplace, designed and manufactured by **CF + D** | custom fireplace design. We are proud of our quality workmanship, our creativity in designing functional art pieces and our commitment to technical innovation. We welcome the challenges that come across our designers' desks, keeping our creative minds working on developing new ideas with our clients to build their dream fire feature.

Upon receiving this letter your fireplace has now been shipped and received. The installation, technical and service manuals are included in the package and our Technical Team is available with assistance throughout the installation and start-up of your new fireplace.

The Management, Designers and our Metal Craftsman, thank you again for the opportunity of being a part of your project. We value our clients greatly and are available for consultation before, during and after the installation of your fireplace.



Vince Volpe
President and CEO
CF + D | custom fireplace design

FIREPLACE COMPONENT BREAKDOWN

AIDAN See-Thru | Suspended Gas Fireplace		
BURNER SYSTEM		
Model	**Manufacturer**	**Listed to/Certified by:**
PB-16 w/EPK-1	RH Peterson	ANSI Z21.60-2012/CSA 2.26-2012
BURNER CHARACTERISTICS		
Description	**Natural Gas**	**Liquid Propane**
BTU's	34000	37000
Min. Input pressure supply	7" of water column	11" of water column
Max. Input pressure supply	10.5" of water column	13" of water column
Manifold pressure	3.5" of water column	10" of water column
CHIMNEY SYSTEM		
Component	**Manufacturer**	**Listed to/Certified by:**
6" ID B-Vent	DuraVent/Don Park	UL 441 and ULC S605
VENTING SYSTEM		
Enervex Intelli Draft System		
Components	**Description**	**Listed and Certified by:**
Automatic Damper Control	ADC 100	UL 508/CSA C22.2 No. 14-05 Certified
Automatic Damper	6" ADM	UL listed
Proven Draft Switch (Pressure Sensor)	PDS-1	UL 508/CSA C22.2 No. 14-05 Certified
Power Fan	RS009	UL 378 CSA-CAN3-B255-M81 Certified

WEIGHT TABLE	
Anchor assembly weight (24" long)	85 lbs. approx.
Flue assembly weight (67" long)	60 lbs. approx.
Fireplace body Weight	155 lbs. approx.
Each add'l. 1 ft. of flue pipe weighs 11 lbs. approx. Each add'l. 1 ft. of anchor pipe weighs 17 lbs. approx.	

RATING PLATE

CF + D | custom fireplace design

5230 Harvester Rd., Unit B2 Burlington, ON L7L 4X4

Ph: 905-681-3070 Toll: 1-866-909-3070

Fireplace has been tested and proved to comply with ANSI Z21.50-2019 • CSA 2.22-2019 Vented Decorative Gas Appliances. Certified under ICC-ES PMG-1290 Made in Canada

MODEL: **PMG-1290-AIDAN**

SERIAL: XXXX

VENTED GAS FIREPLACE; NOT FOR USE WITH SOLID FUEL.

FOR USE WITH GLASS DOORS CERTIFIED WITH THE APPLIANCE ONLY.

NOT CERTIFIED FOR MOBILE HOMES.

This appliance must be installed in accordance with local codes, if any; if none, follow ANSI Z223.1/NFPA 54, or CSA B149.1. This appliance is only for use with the type of gas indicated on the rating plate and may be installed in an aftermarket, permanently located, manufactured home (USA only) or mobile home, where not prohibited by local codes. See owner's manual for details. This appliance is not convertible for use with other gases.

WARNING: Improper Installation, adjustment, alteration, service, or maintenance can cause injury or property damage. Refer to the owner's information manual provided with this appliance. For assistance or additional information consult a qualified installer, service agency or the gas supplier.

CAUTION: Hot while in operation. Do not touch. Severe burns may result. Keep children, clothing, furniture, gasoline, and other liquids having flammable vapors away. Appliance. For assistance or additional information, consult a qualified installer, service agency, or the gas supplier.

CLEARANCE TO COMBUSTIBLES: 12" around the fireplace, 12" from floor to bottom of the unit, 1" around flue and anchor assembly must be maintained to prevent fire, injury and damage to property.

Certified with Enervex Intelli System (Power Vent Exhaust System). For use only with automatic vent damper device Part No. 201.0000.1206 follow installation instructions.

Total Electrical Input "Less than 12 amperes."

BURNER IDENTIFICATION

Manufacturer	:- RH PETERSON
Type of fuel	:- XXXX
BTU's	:- XXXX
Min. Input pressure supply	:- XXXX
Manifold pressure	:- XXXX
Max. Input pressure supply	:- XXXX

INSTALLATION REQUIREMENTS

A) Installation Requirements

- Prepare the installation location for the fireplace.
- **KEEP PACKAGING AND FOAM** on the unit until installation is complete. Once the installation is complete, remove the rest of the packaging material. Remove packaging **ONLY** from the end of the fireplace flue collar for installation.
- Small marks and smudges may be touched up with supplied touch-up paint if necessary.

CAUTION!

BEFORE INSTALLATION ensure that you have read and understood all provided manuals and drawings.

Required tools

- 3/16" Drill Bit
- 5/32" Allen key
- 1/8" Allen key
- Level
- Deep socket & Wrench set (3/4" Specifically)
- Scaffolding if necessary
- Hammer
- Lifting device
- 2 person minimum is required for installation.



B) Electrical & Gas Connection Requirements

NOTE: The Enervex Intelli Draft Power Vent System electrical installation must be completed BEFORE installing your fireplace!

CAUTION!

The Enervex Intelli Draft Power Vent System must be CONNECTED AND FUNCTIONAL BEFORE the burner can be lit!

WARNING!

DO NOT CONNECTTHIS UNITTOA CHIMNEY FLUE SERVING ANOTHER APPLIANCE.

NOTE : The gas line connection may be made using ½" rigid tubing or an approved flex connector. Since some Municipalities have additional local codes it is always best to consult your local authorities and the current edition of the National Fuel Gas Code ANSI. Z223.1, NFPA54. In Canada CAN/CGA-B149 (*1 or 2*) Installation Code.

Electrical dedicated switch operation recommended for all applications.

It is the responsibility of the customer to have enough slack of gas line for connection at fireplace body. The electrical wire provided by CF + D for Burner controls connection will have enough slack to meet your ceiling height requirements.

1 ft. additional Slack of Gas line required at the ceiling for possible service and maintenance needs.

The manual further covers instructions on Horizontal Venting Termination & Vertical Venting Termination. Follow the instructions for the termination that suits best to your application. Refer to the layout drawings provided before where appropriate.

VERTICAL TERMINATION

FIREPLACE SPECIFICATIONS

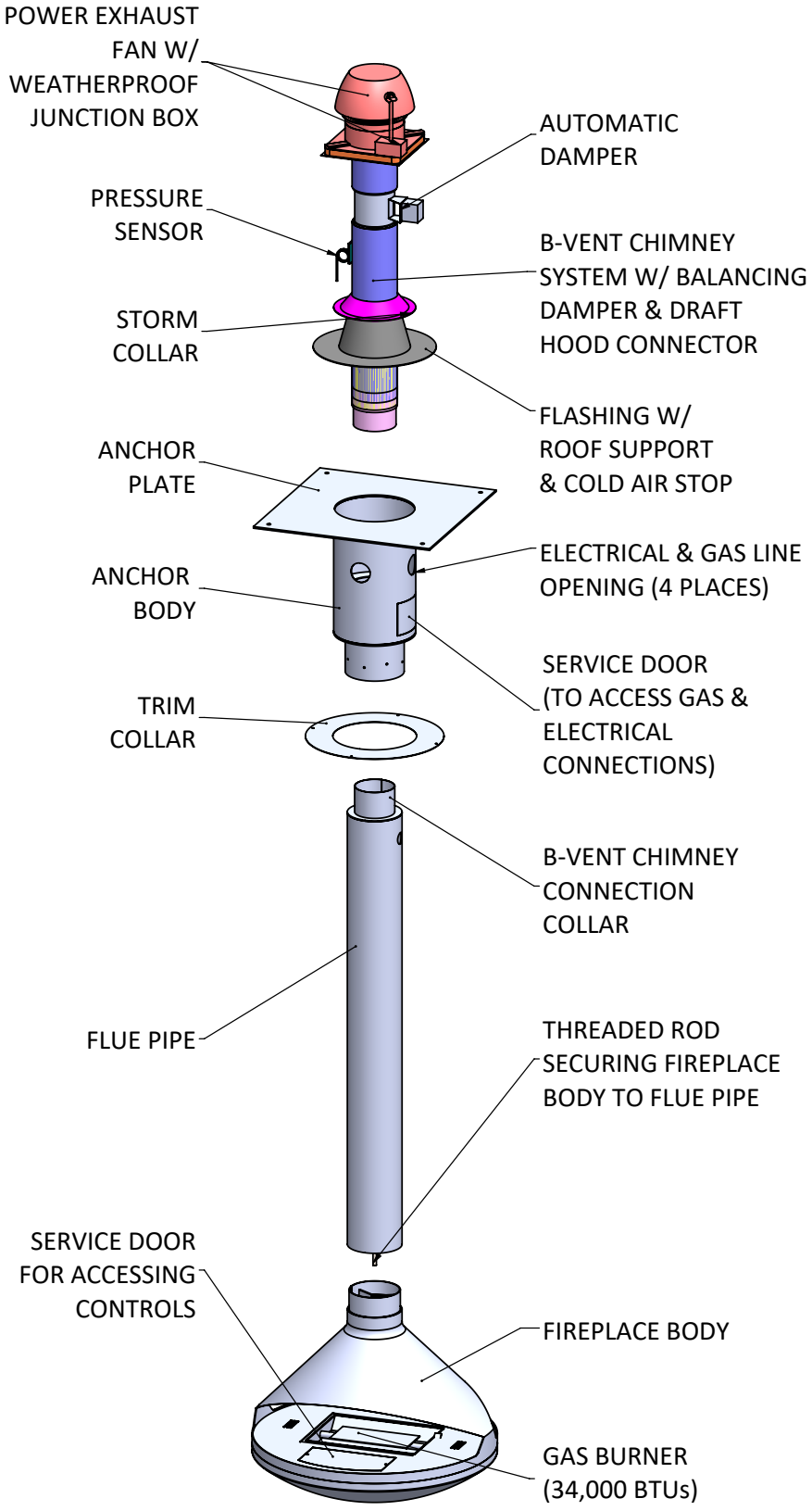

EXPLODED VIEW

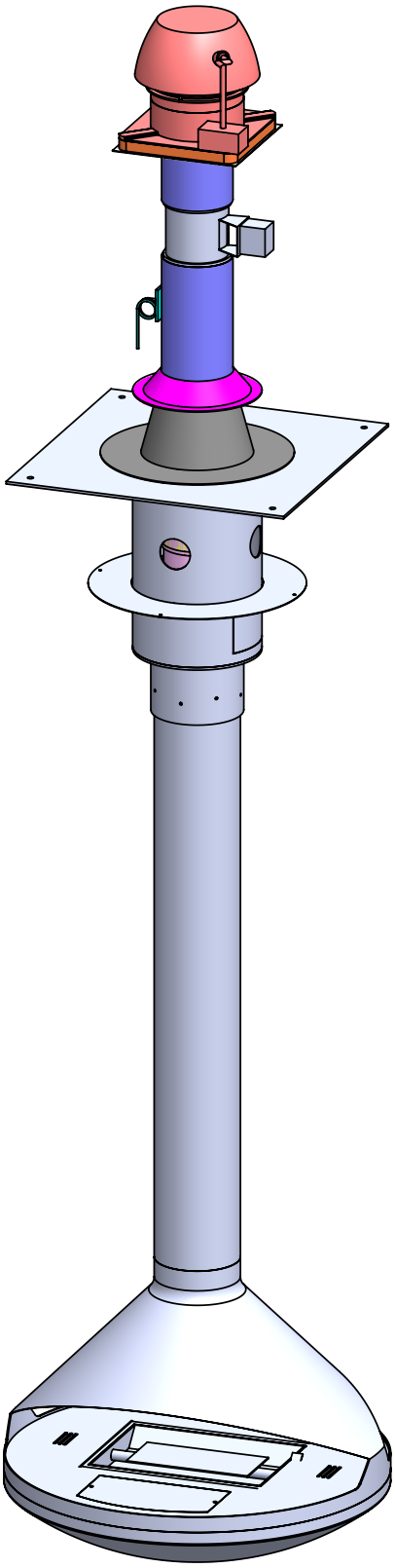

ASSEMBLY VIEW

FIREPLACE SPECIFICATIONS

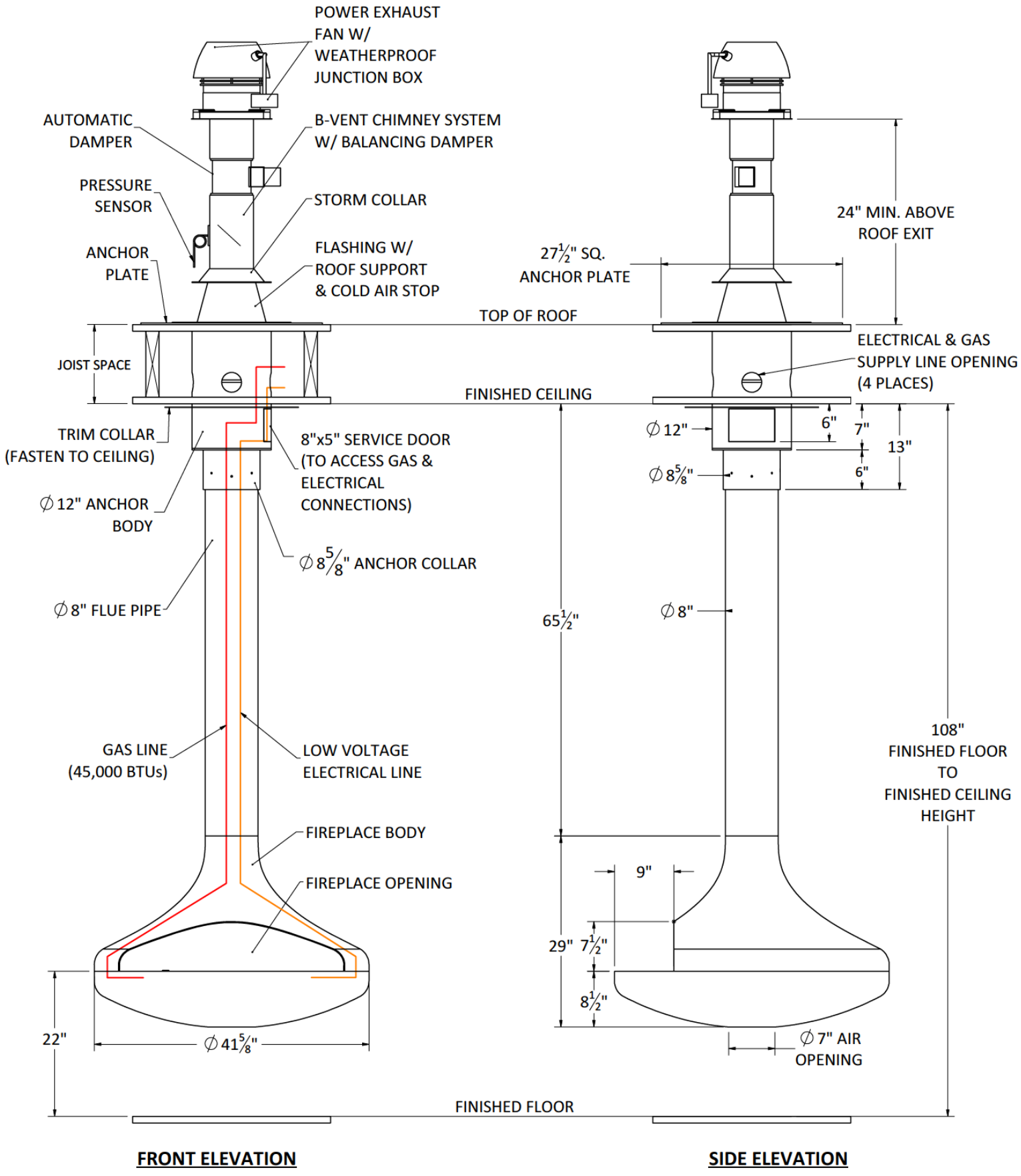

ANCHOR OPTIONS DIAGRAM

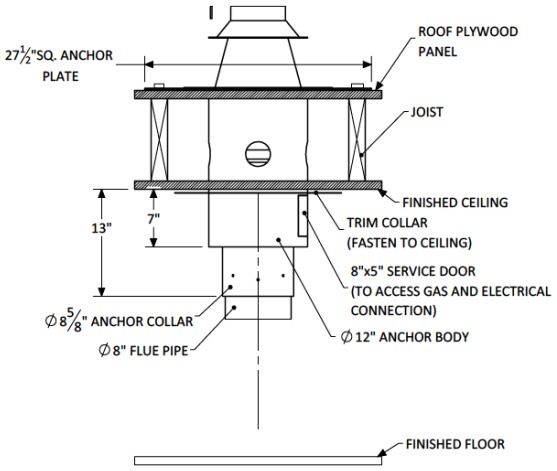

OPTION A - FLAT ROOF DROP FROM ABOVE

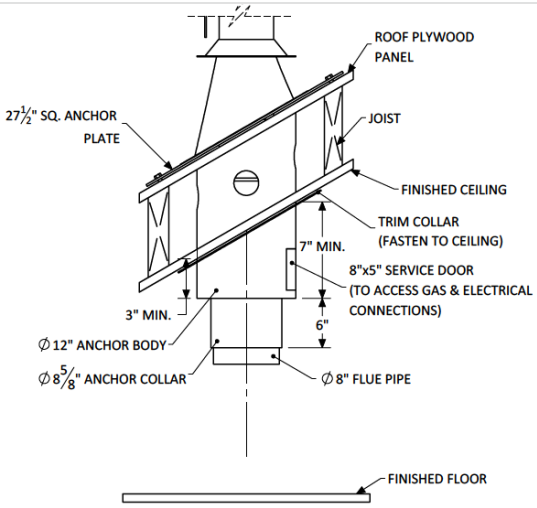

OPTION B - SLOPED DROP FROM ABOVE

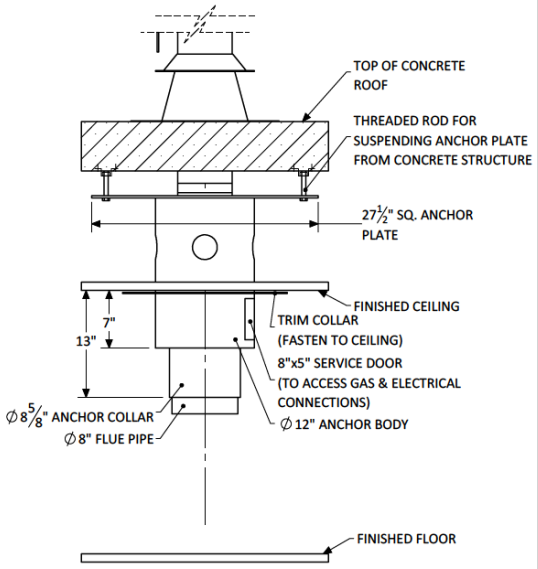

OPTION C - SUSPENDED FROM CONCRETE

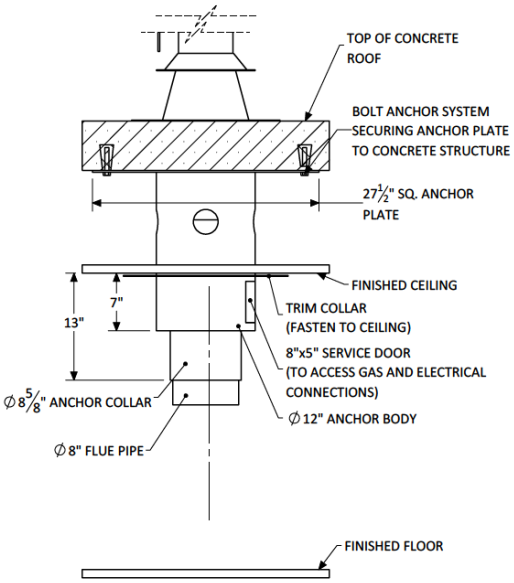

OPTION D - ATTACHED BELOW CONCRETE

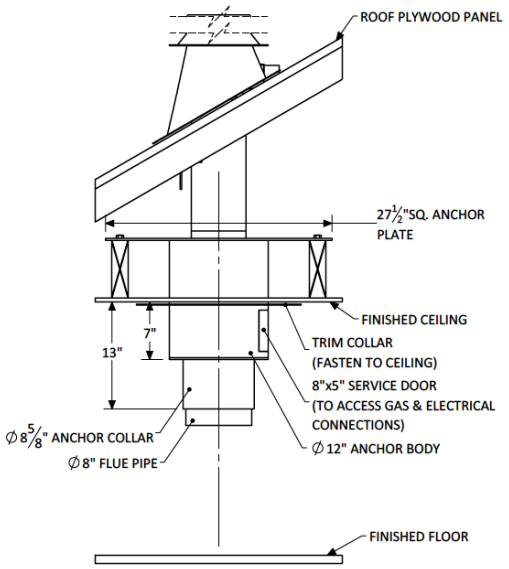

OPTION E - SLOPED ROOF FLAT CEILING ANCHOR DROPPED ON ROOF

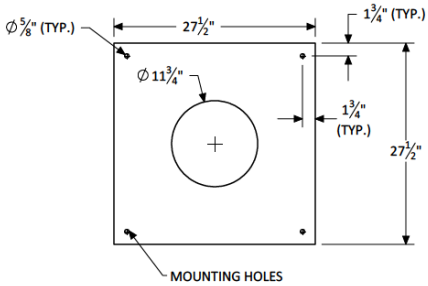

STANDARD ANCHOR PLATE- 1/4" THICK.

CLEARANCE TO COMBUSTIBLES

FIREPLACE POSITIONING NOTES:

- **A MINIMUM OF 12" FROM FLOOR TO THE BOTTOM OF THE FIREPLACE.**
- **A MINIMUM OF 12" IS REQUIRED BETWEEN A COMBUSTIBLE WALL AND THE FIREPLACE BODY AND FLUE PIPE.**
- **A MINIMUM OF 1" WHERE THE ANCHOR OR FLUE CROSSES THE CEILING & ROOF.**
- **CLEARANCES MUST BE MAINTAINED FROM ANY COMBUSTIBLE MATERIAL.**
- **FIRE AND PROPERTY DAMAGE MAY OCCUR IF THIS CLEARANCE IS NOT MAINTAINED.**

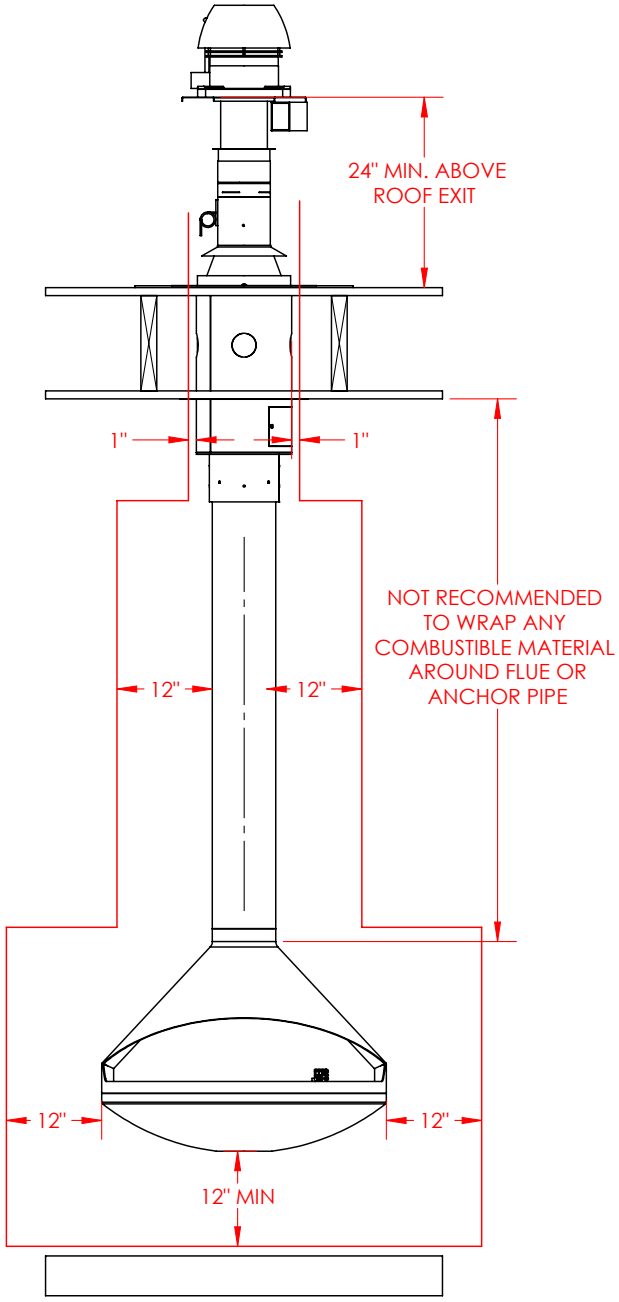

FRONT ELEVATION

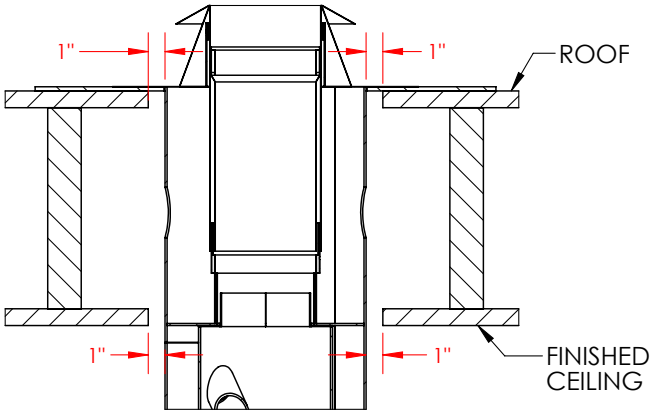

CLEARANCE TO COMBUSTIBLES AT CEILING AND ROOF

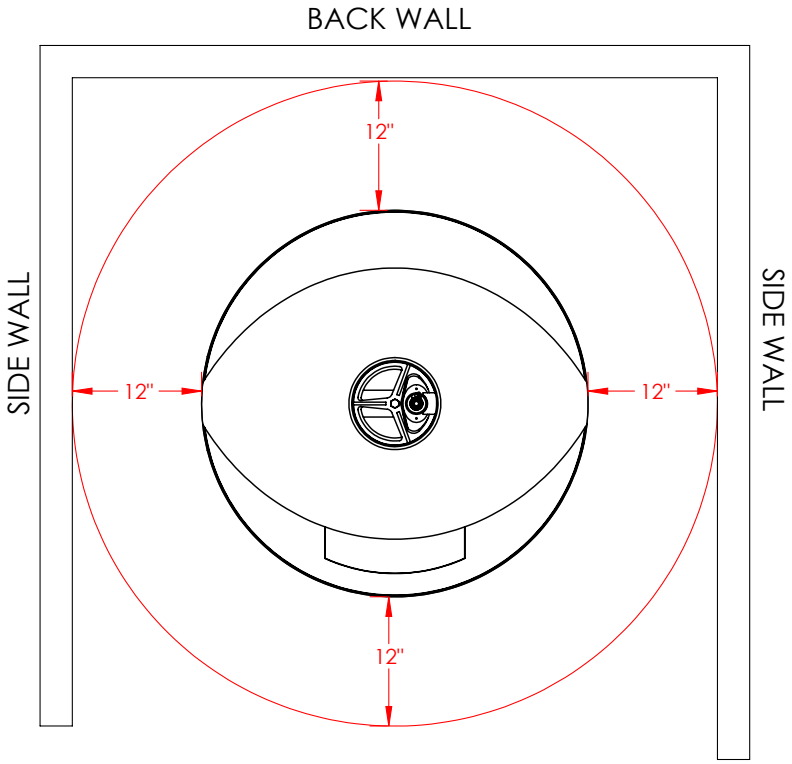

TOP VIEW

CLEARANCE TO COMBUSTIBLES AROUND FIREPLACE BODY

ENERVEX ELECTRICAL DIAGRAM

TYPICAL VITA GAS ENERVEX ELECTRICAL DIAGRAM

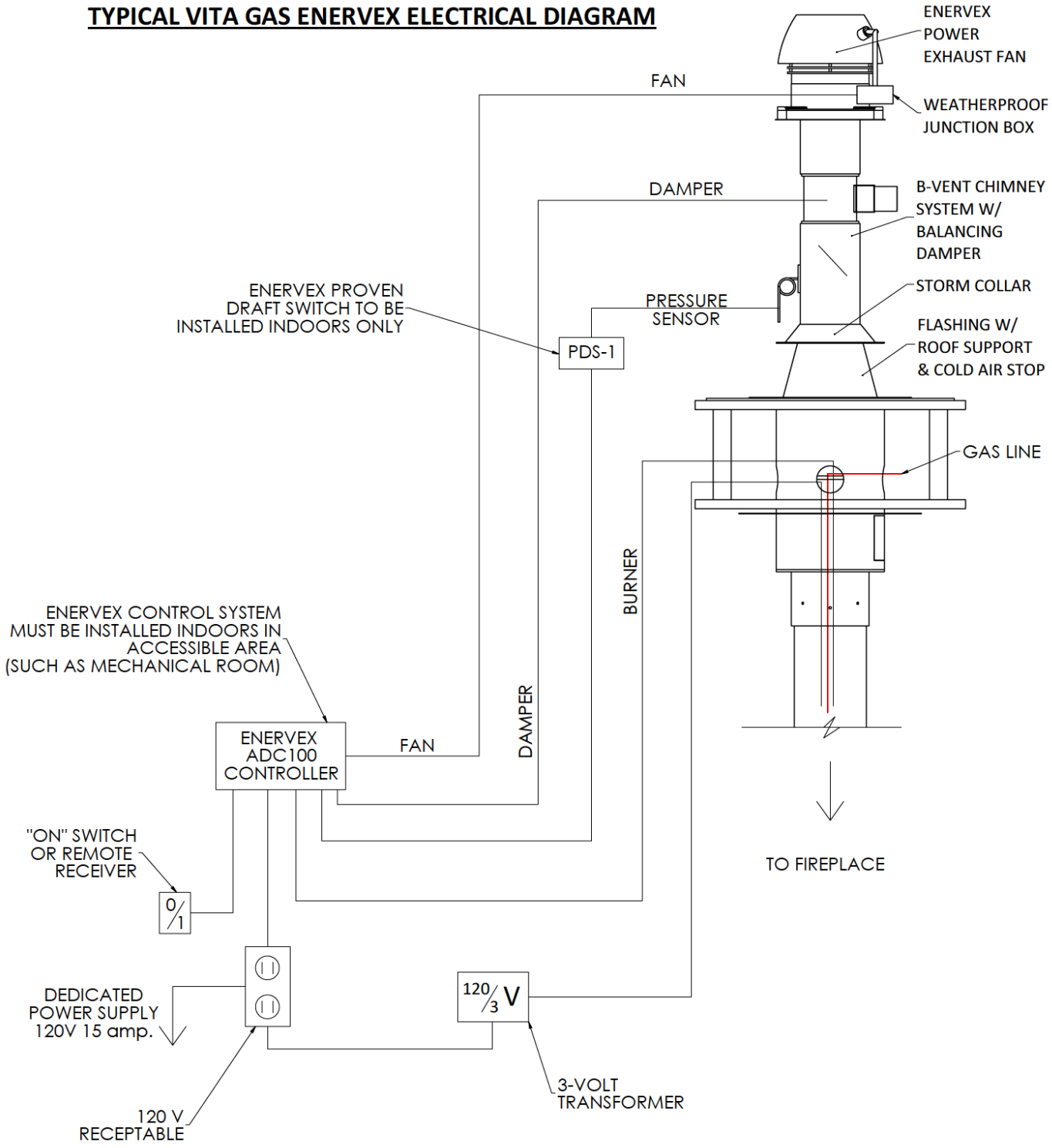

SCHEMATIC ENERVEX SYSTEM
AS PER ENERVEX MANUALS/MEP
REQUIREMENTS

SEE PAGE 11 OF ENERVEX ADC100
MANUAL

HORIZONTAL TERMINATION

FIREPLACE SPECIFICATIONS

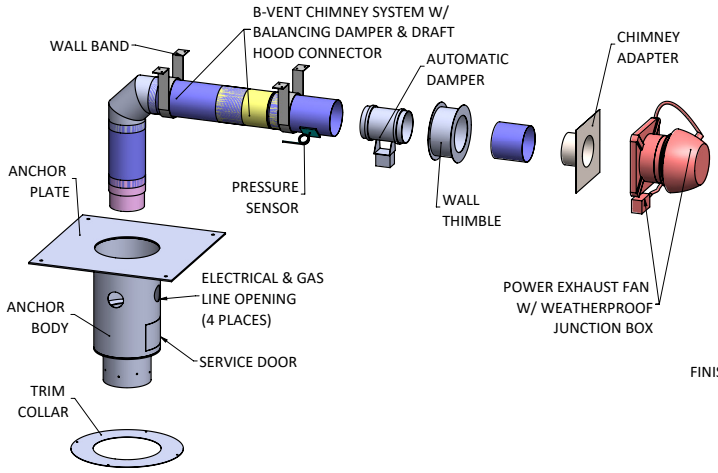

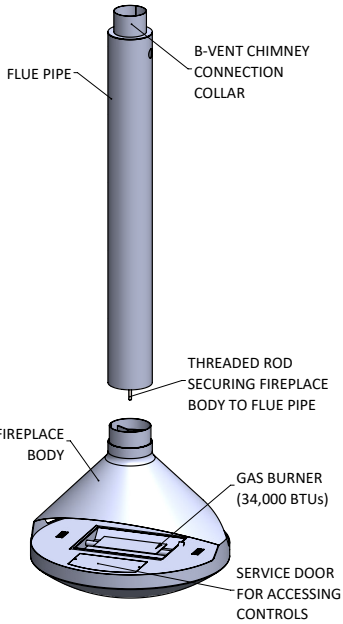

EXPLODED VIEW

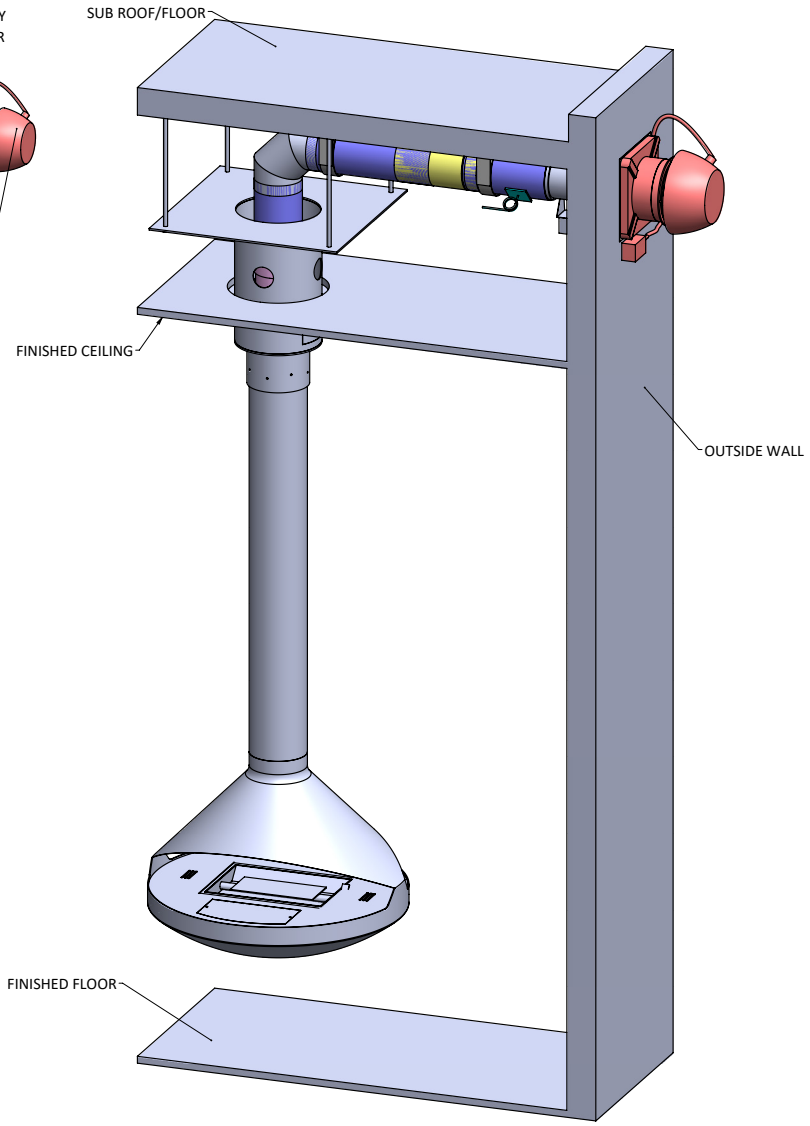

FIREPLACE SPECIFICATIONS

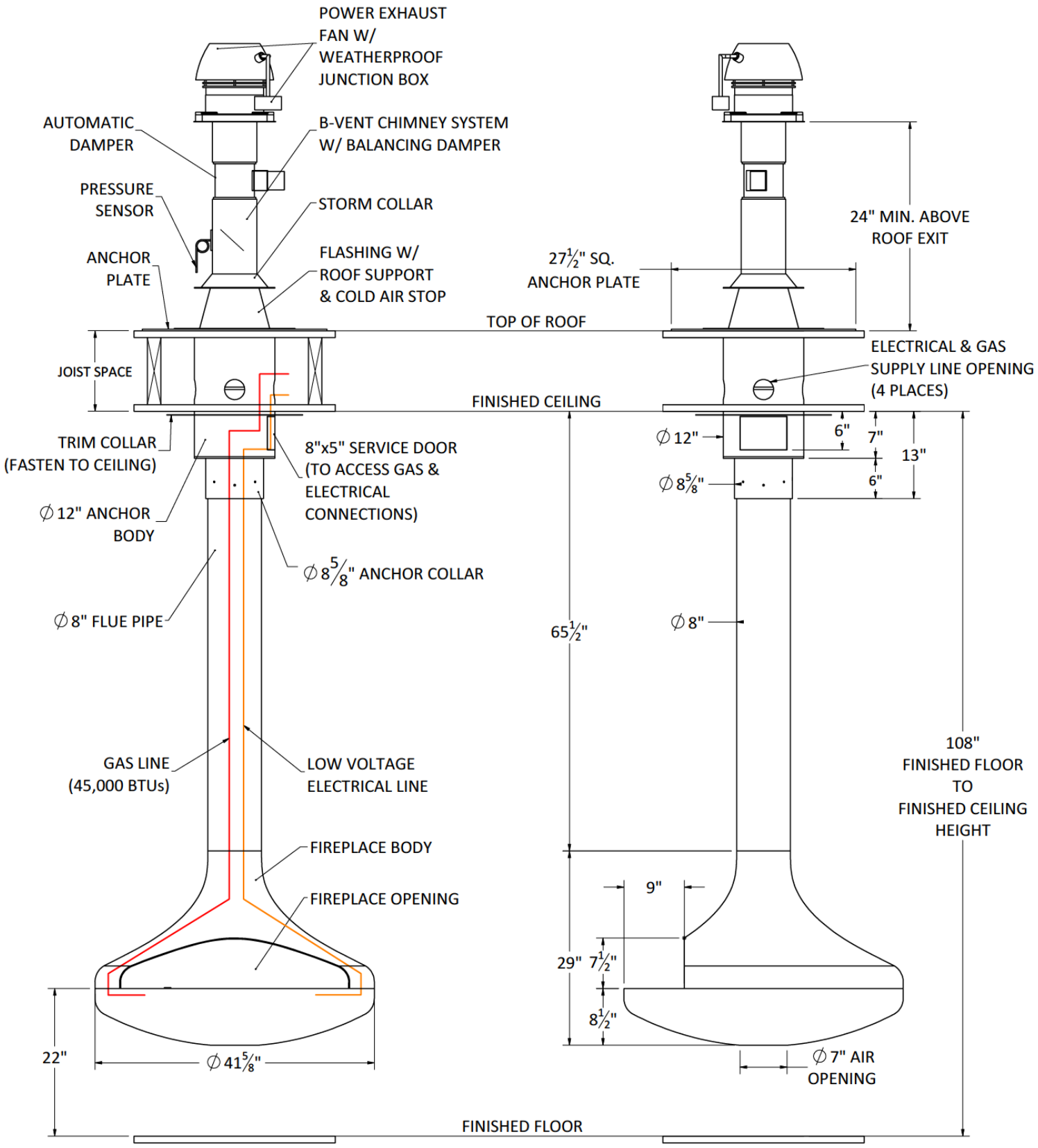

FRONT ELEVATION **SIDE ELEVATION**

ANCHOR OPTIONS DIAGRAM

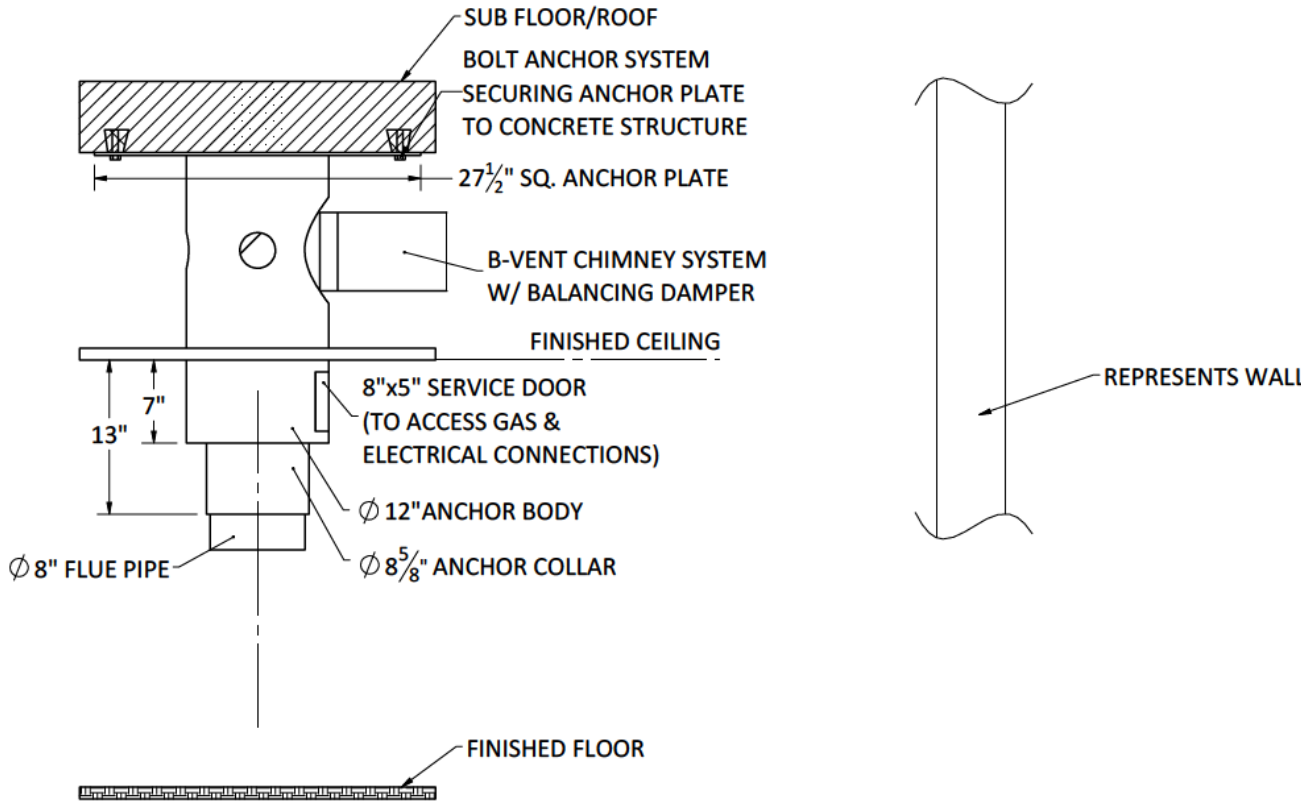

OPTION A - ATTACHED BELOW CONCRETE

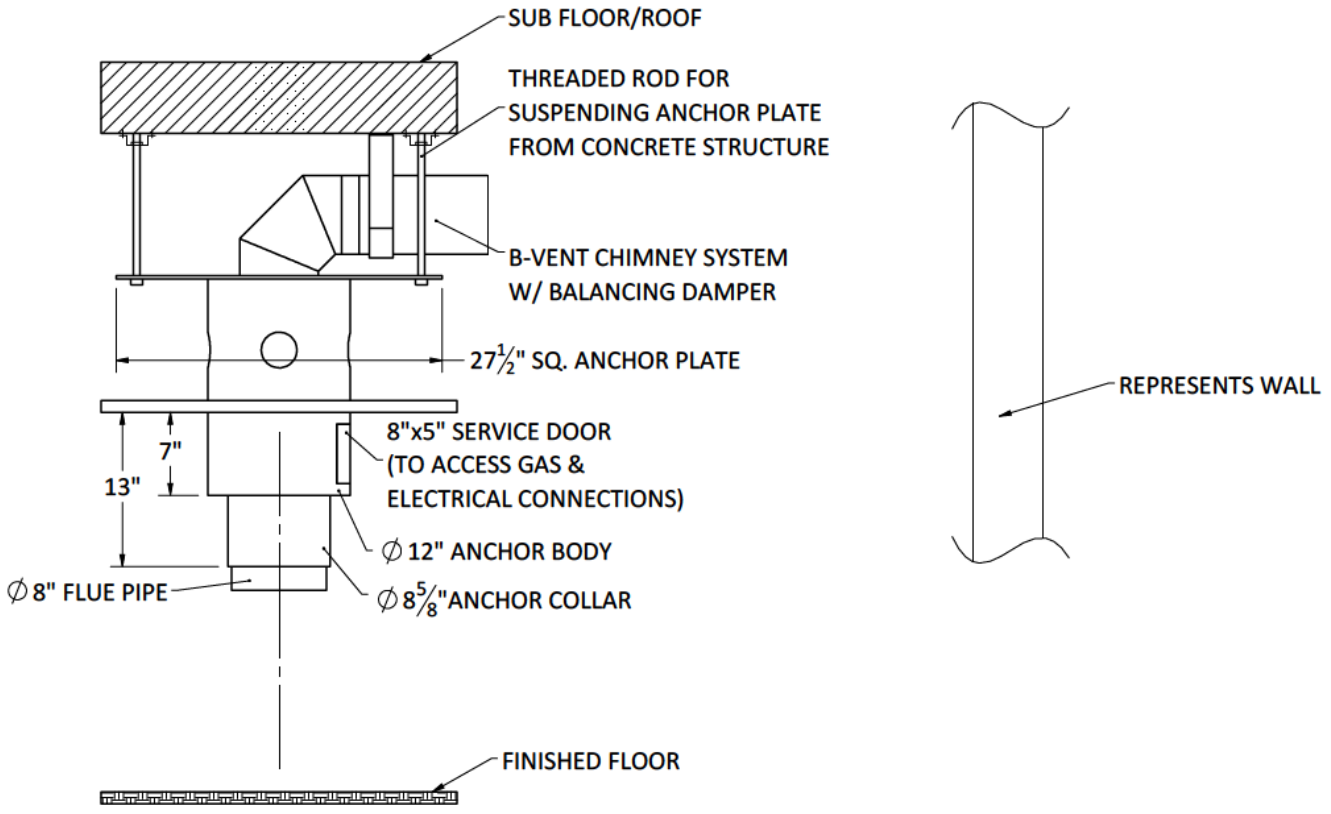

OPTION B - SUSPENDED FROM CONCRETE

CLEARANCE TO COMBUSTIBLES

FIREPLACE POSITIONING NOTES:

- **A MINIMUM OF 12" FROM FLOOR TO THE BOTTOM OF THE FIREPLACE.**
- **A MINIMUM OF 12" IS REQUIRED BETWEEN A COMBUSTIBLE WALL AND THE FIREPLACE BODY AND FLUE PIPE.**
- **A MINIMUM OF 1" WHERE THE ANCHOR OR FLUE CROSSES THE CEILING & ROOF.**
- **A MINIMUM OF 1" WHERE THE CHIMNEY SYSTEM TERMINATES AT WALL OUTLET.**
- **CLEARANCES MUST BE MAINTAINED FROM ANY COMBUSTIBLE MATERIAL.**
- **FIRE AND PROPERTY DAMAGE MAY OCCUR IF THIS CLEARANCE IS NOT MAINTAINED.**

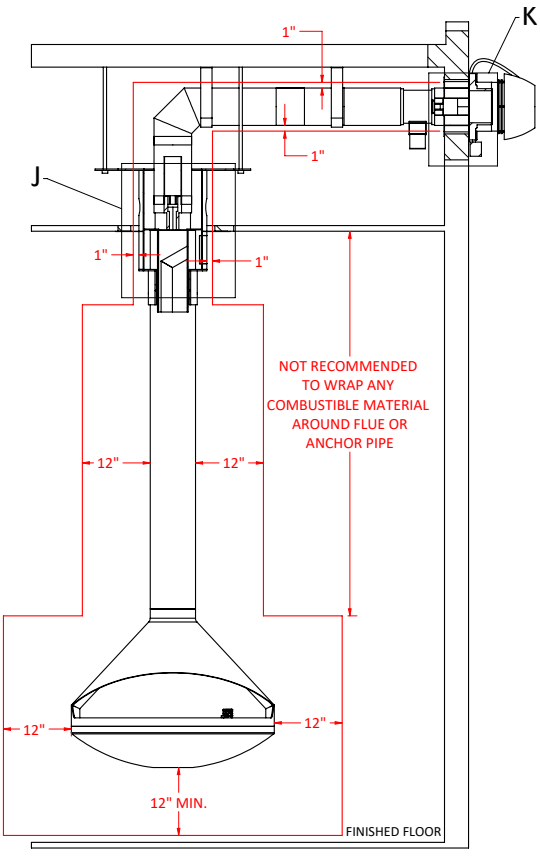

FRONT ELEVATION

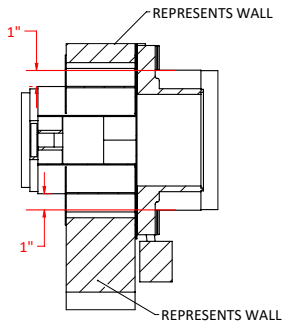

DETAIL K
SCALE 1 : 7
CLEARANCE TO COMBUSTIBLES AT WALL TERMINATION

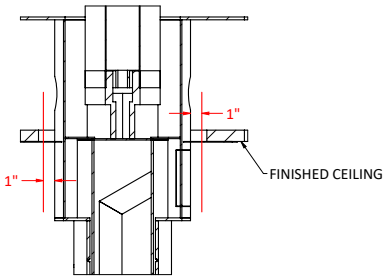

DETAIL J
SCALE 1 : 10
CLEARANCE TO COMBUSTIBLES AT CEILING/ROOF

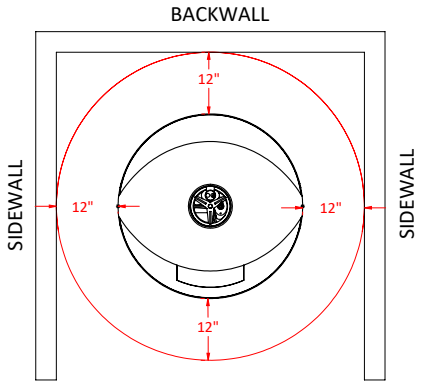

CLEARANCE TO COMBUSTIBLES AROUND FIREPLACE BODY

ENERVEX ELECTRICAL DIAGRAM

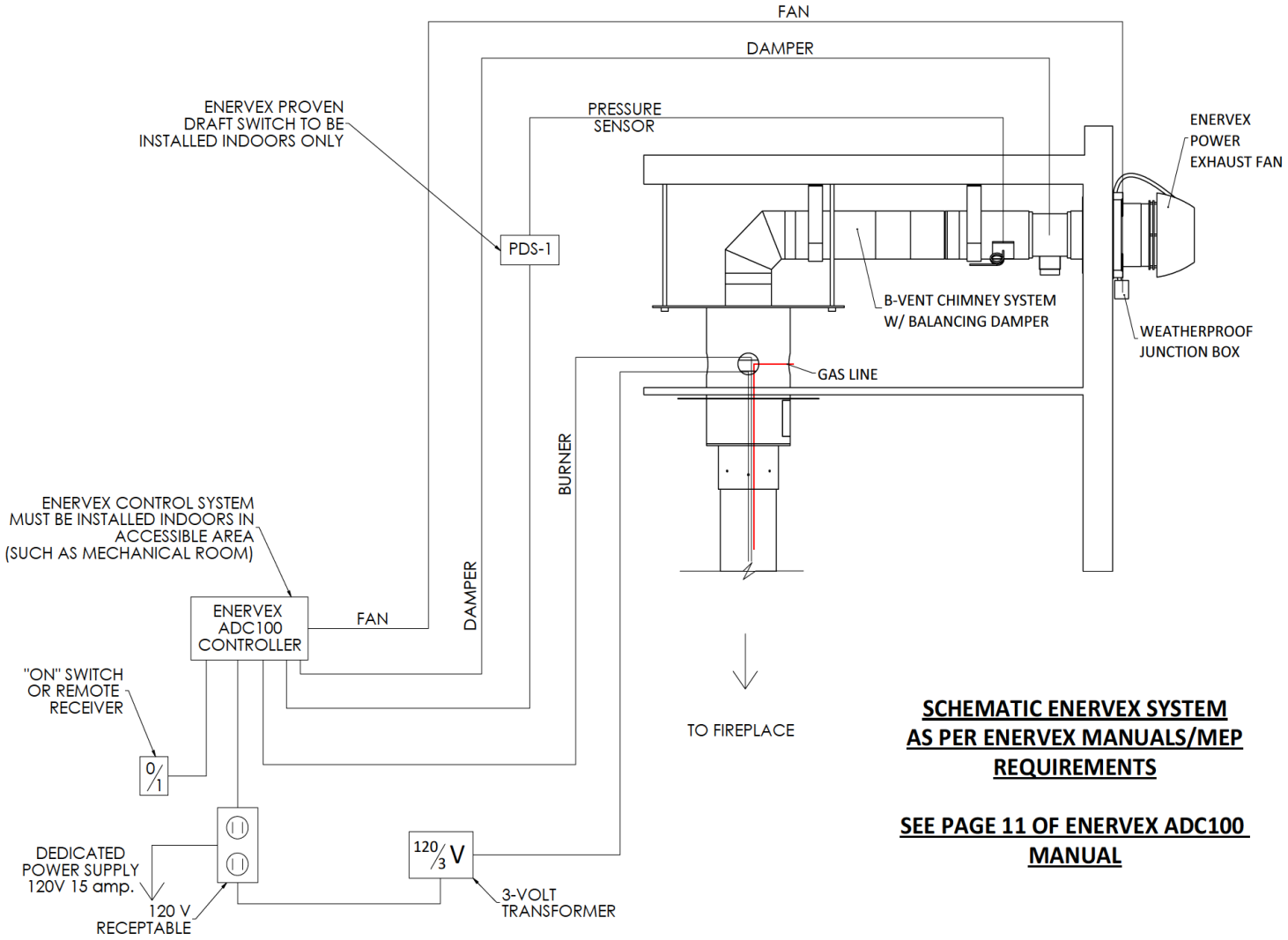

SCHEMATIC ENERVEX SYSTEM AS PER ENERVEX MANUALS/MEP REQUIREMENTS

SEE PAGE 11 OF ENERVEX ADC100 MANUAL

1. Install the Anchor Assembly

The anchor is the first piece to be installed, it will hold the weight of the flue pipe, and the fireplace body while suspending the unit from the ceiling or roof. The chimney system builds up from the anchor. The flue and fireplace body is suspended from the anchor. The anchor assembly is mounted and supported by the support frame constructed solely for this purpose. A supported opening in the roof or ceiling to accommodate the anchor assembly will be required. Adequate and approved structural methods must be used when mounting the anchor for it to carry its designated load.

CAUTION!

THE SUPPORT OF THE ANCHOR ASSEMBLY (ROOF STRUCTURE, SLAB, ETC.) MUST BE SIZED IN ACCORDANCE WITH THE STATIC AND DYNAMIC LOADS OF THE FIREPLACE. THE SIZE CALCULATION FOR THE SUPPORT IS NOT THE RESPONSIBILITY OF CF + D OR ITS AFFILIATES. IT IS YOUR RESPONSIBILITY TO CONSULT WITH AN ENGINEER OR ARCHITECT FOR YOUR PROJECT.

Before starting, verify the location of the flue pipe and fireplace body. Also, verify the point at which the anchor assembly will be positioned. Lift the anchor assembly into a position to be placed in the prepared supported ceiling or roof. Depending on your application refer to your specific layout drawing for custom anchor plate installation (See *Anchor Options Diagram Page # 9 & 15*).

The anchor for a fireplace with internal gas lines has been manufactured with an access door in the anchor body, which will be visible below the finished ceiling line. Install the anchor so that the access door is facing what will be considered the side of the fireplace. Where the roof is sloped, this orientation will have been designed into the anchor.

Place the anchor in the desired location and mount it on the support structure using ½" screws/ bolts (*Figure 1 & 2*). Screws must be mounted into studs or solid substrate.

The anchor assembly shall be secured in place and the flue pipe should hang level and straight.

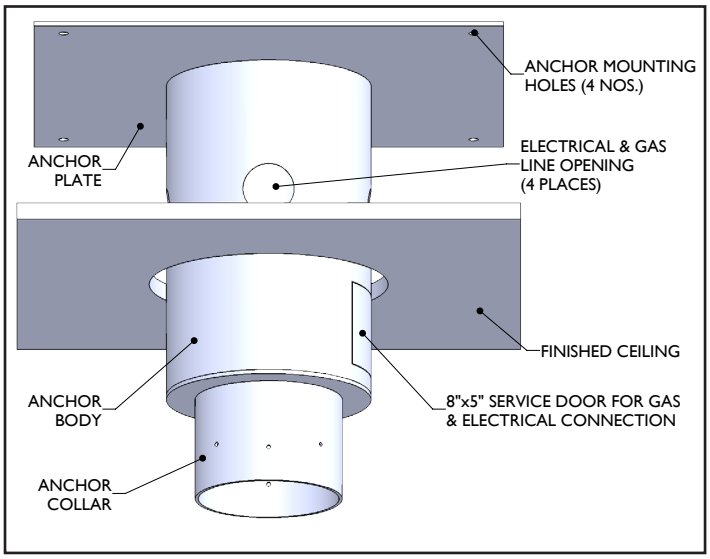

Figure.1 - Represents Flat Anchor

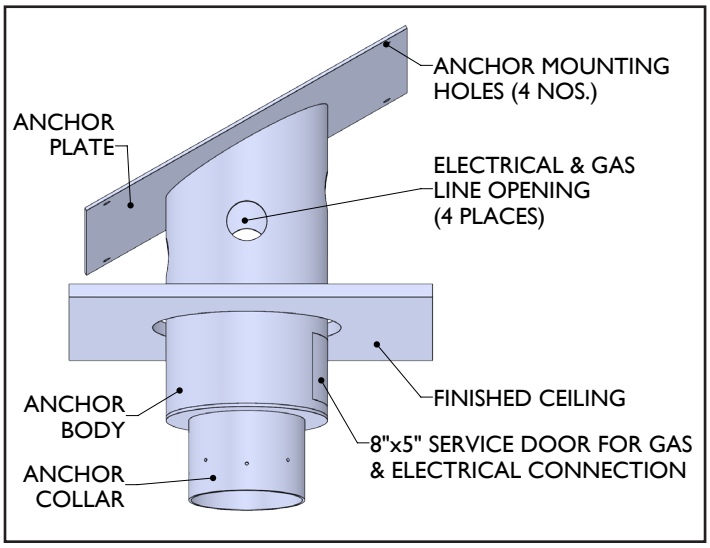

Figure.2 - Represents Sloped Anchor

2. Install the Trim Collar

Fit the trim collar around the Anchor pipe and slide it upwards to meet the finished ceiling. Affix the trim collar to the finished ceiling either by using 4 screws (*not provided*), or other means of attachment depending on your requirements. (*See Figure 3 & 4.*)

NOTE: You will not be able to install the trim collar once the fireplace body has been attached!

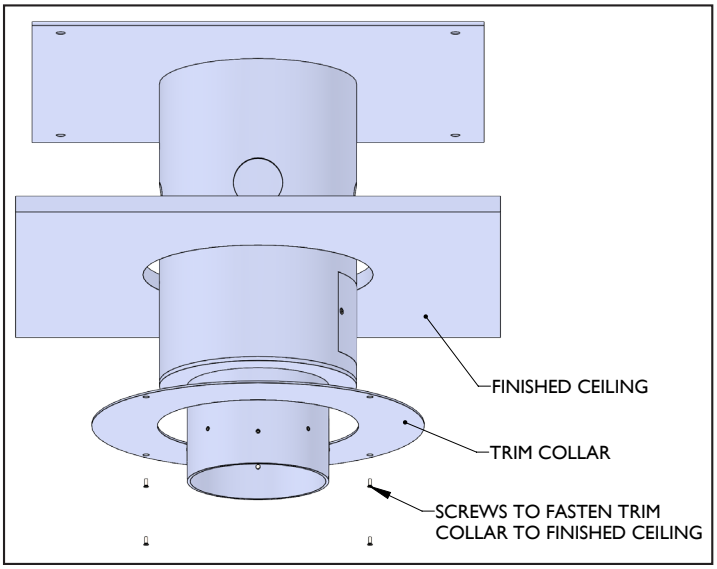

Figure.3

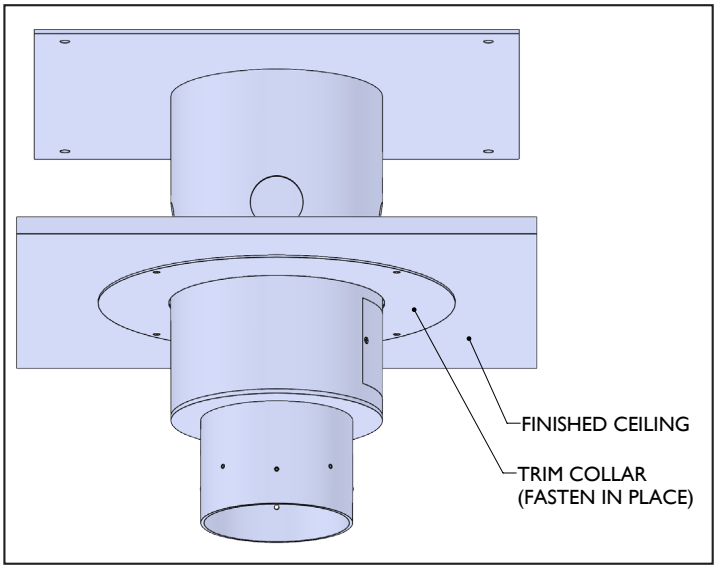

Figure.4

NOTE:

IF THE CEILING HEIGHT IN YOUR APPLICATION IS MORE THAN THE CF + D's STANDARD CEILING HEIGHT APPLICATION, YOU MAY HAVE BEEN SUPPLIED WITH MULTIPLE FLUE SECTIONS. PLEASE FOLLOW STEPS 5 & 6 BEFORE PERFORMING THE STEP 4 FIREPLACE BODY INSTALLATION. USING YOUR LAYOUT DRAWING AS A GUIDE, REVIEW THE NUMBER OF FLUE PIPES YOU HAVE BEEN SUPPLIED WITH AND ENSURE THAT YOU ARE INSTALLING THEM IN THE CORRECT ORDER. PLEASE REFER TO STEP 3 INSTALL THE FLUE PIPE FOR INSTALLING THE FIRST PIECE OF FLUE PIPE INTO THE ANCHOR BODY. THE FIRST SECTION OF FLUE PIPE WILL HAVE A REDUCTION COLLAR FOR CHIMNEY VENTING INSTALLATION. (SEE FIGURE -5)

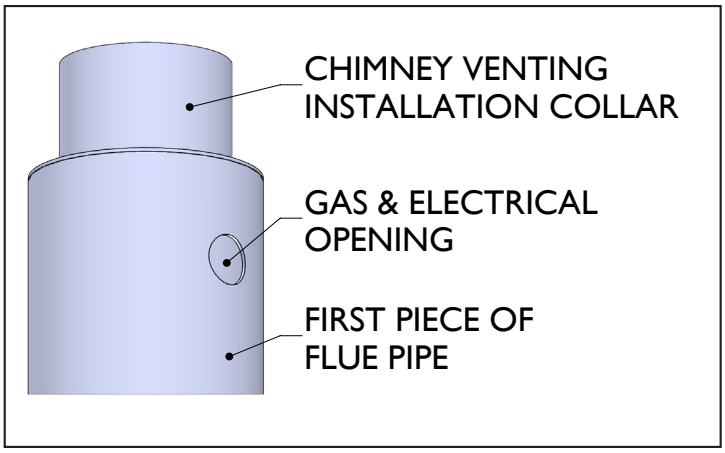

Figure.5

IF THE CEILING HEIGHT IN YOUR APPLICATION IS WITHIN THE CF + D's STANDARD CEILING HEIGHT APPLICATION, YOU MAY HAVE BEEN ONLY SUPPLIED WITH ONE SECTION OF FLUE PIPE. THE TOP OF THAT FLUE PIPE WILL HAVE SAME DETAILS AS SHOWN IN FIGURE - 5. PLEASE PROCEED TO STEP 3 INSTALL THE FLUE PIPE.

3. Install the Flue Pipe

Remove the anchor service door. Install the flue pipe into the anchor body, ensuring that the gas line conduit inside the flue pipe lines up with the access opening on the anchor body. The flue pipe have already been cut to the proper installation length.

NOTE: There are 8, pointed load bearing set screws installed into the anchor body and 2 stainless split pins included in the package. The 8 set screws are staggered in position. Begin by loosening each set screw in the anchor body to maximize space for the flue pipe to enter the anchor.

Raise the flue pipe up to meet the anchor body that has now been positioned. The flue pipe is designed to fit directly into the anchor body (See *Figures 6 & 7*).

Use a 5⁄32 Allen key to tighten one screw until resistance is felt, then tighten the screw directly opposite on the other side of the flue until resistance is felt and continue.

When all 8 screws are half tightened, check the position of the flue pipe and continue adjusting until perfectly straight and level. Once the flue is in perfect position, completely tighten each of the 8 set screws firmly securing the flue pipe into the anchor.

Locate the two 1/8" pilot holes directly opposite each other in the anchor body. Once the cramping screws have been tightened, the two stainless steel split pins (provided) must be inserted into the anchor collar.

There are two holes drilled into the anchor collar. The mating holes are not pre-drilled and will require drilling at site.

Using the holes in the anchor as guides, pass a 3⁄16" drill bit through each pilot hole and through the flue pipe.

Carefully hammer the split pins into place through the anchor wall into the flue pipe until flush which will permanently lock the flue pipe to the anchor.

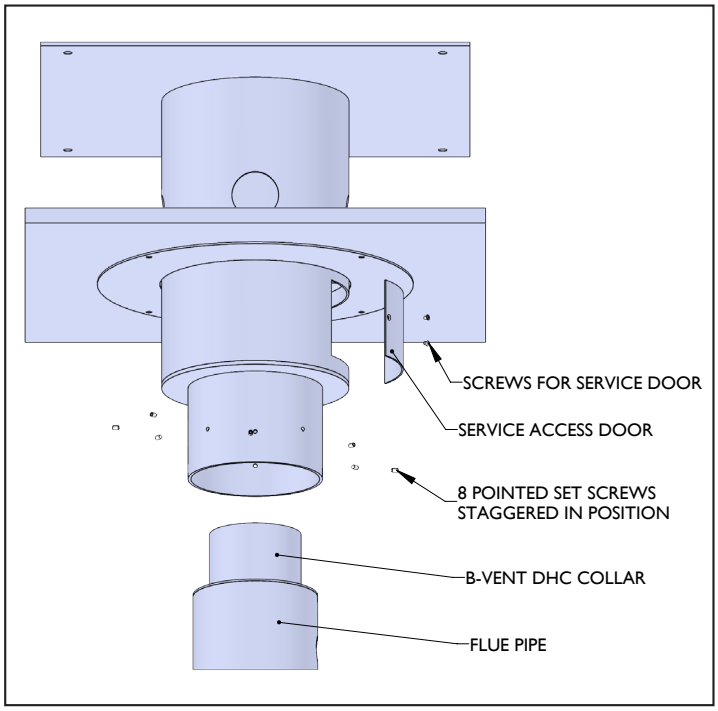

Figure.6

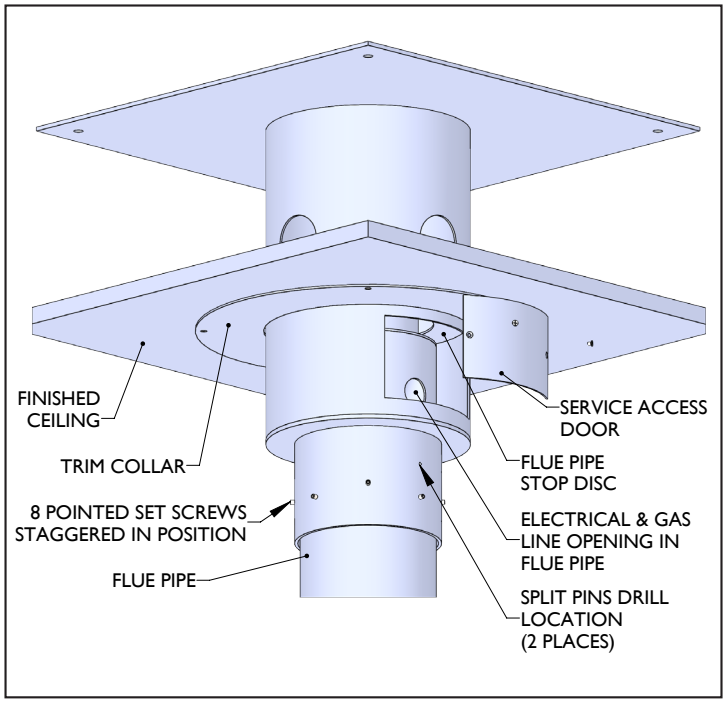

Figure.7

4. Install the Fireplace Body

There are alignment marks on the flue and the fireplace body right at the seam on the rear. Align these marks when installing the fireplace body to the flue at what would be considered the rear of the application. The Flue Pipe contains the Gas/Electrical Conduit for Gas Fireplace. Ensure that the Gas/Electrical Conduit is in the correct position for the Fireplace Unit.

NOTE: ENSURE THAT YOU HAVE READ YOUR MANUAL TO AVOID DAMAGE TO THE FIREPLACE BODY! This operation will require multiple people.

Feed the flexible gas line down through the conduit in the flue pipe and hole in the anchor stop plate and through to the access door in the anchor.

Ensure that the flexible gas line runs through the conduit in the flue pipe and has slack to make the connection to the burner gas line already installed in the fireplace body.

Using an appropriate lifting device, raise the fireplace body up towards the flue pipe until the flexible gas line in the fireplace body can be connected to the flex-line from the flue pipe.

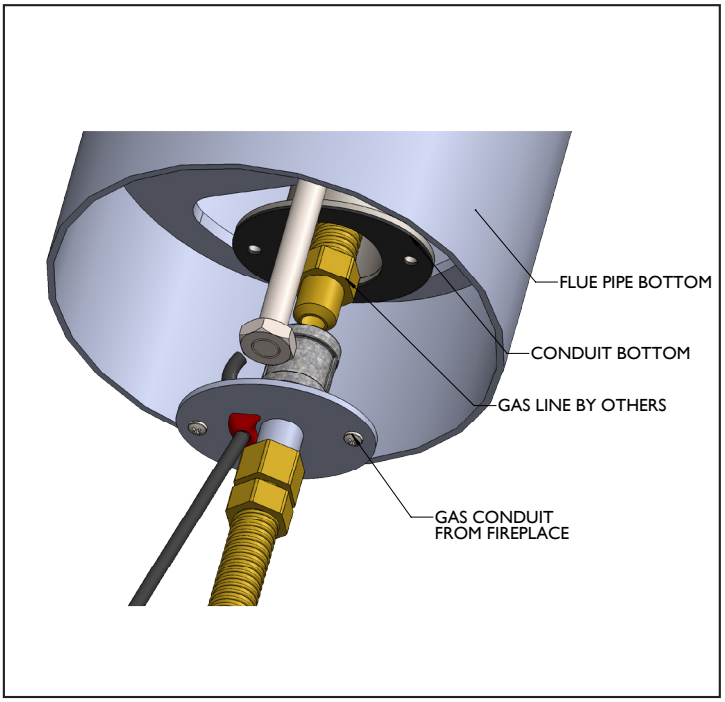

Figure.9

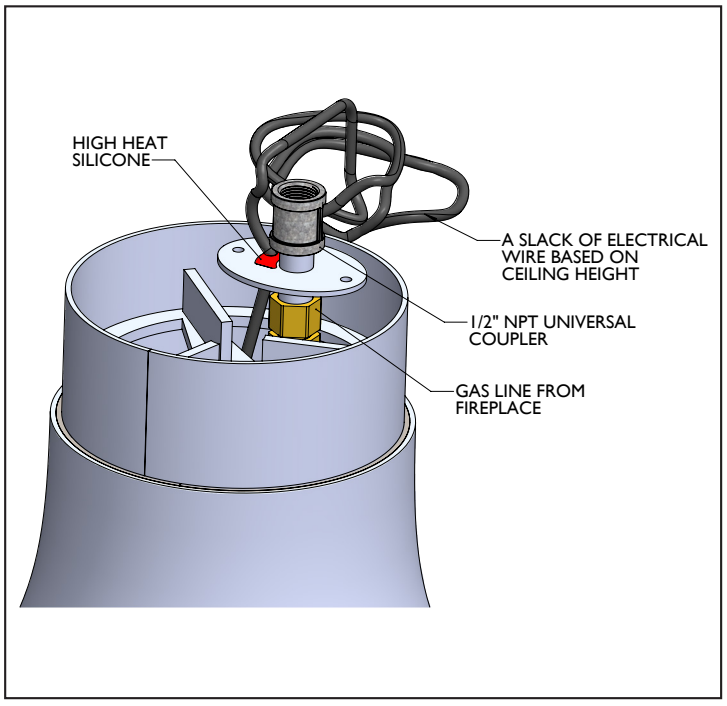

Figure.8

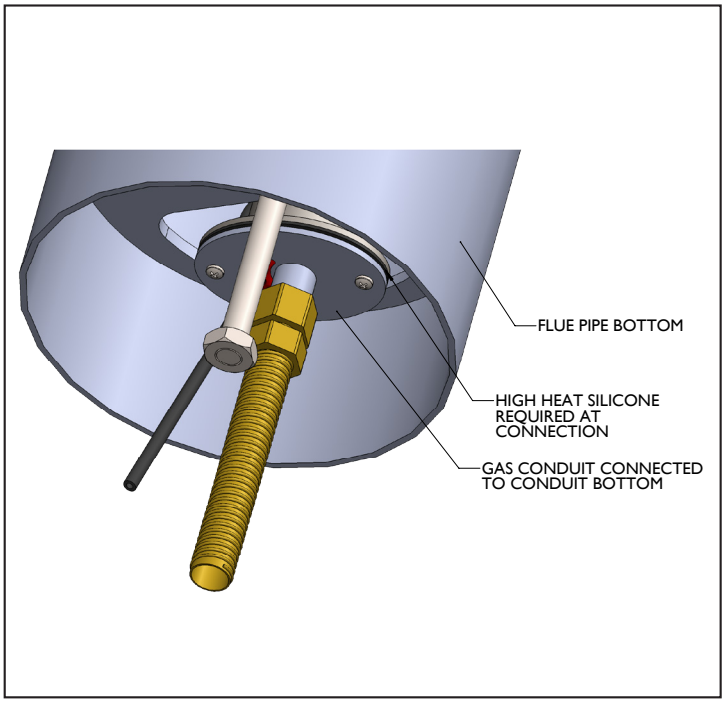

Figure.10

NOTE: This fireplace is equipped with an Enervex Power Vent System, there will be an additional connector to run the Enervex wires through the conduit with the gas line.

THE CONNECTION DETAIL: Since this connection must be air-tight, the gas line from the burner is equipped with a special flanged nipple. There are two holes in the flange (See *Figure 9*).

Carefully pull the gas line up out of the body, removing the slack from the line, to make the connection. Connect the gas line from the flue to the nipple onto the gas line from the burner.

From the access door on the anchor, remove some of the slack from the gas line that was fished through the flue conduit. Make your connection(s) either to your flexible gas supply line or to the nipple on the underside of the stop disc in the anchor if your anchor is hard-piped. Turn the gas on and test all connections for leaks. All connections in the fireplace have been factory tested, but it is best practice to test all connections on-site.

Align the holes of the flange on the gas nipple from the fireplace body with the flange on the end of the flue conduit. DO NOT dislodge the red silicone O-ring which is adhered to the flange. Insert and tighten the fasteners provided until they are hand-tight. Remove the access door from the front of the fire bowl or the vertical heat shield inside the body. Put the cover aside for safe keeping.

Lift the fireplace body into place ensuring that the upper bearing assembly or non-rotating washer assembly is in place. As you lift the fireplace, manipulate the flex-line through the access door as required to ensure that there is slack in the line. Add the lower bearing/washer assembly and tighten as required. A safety cotter pin is now inserted into the hole.

You may now remove remaining packaging and/or foam materials. Connect any control and power supply wires required for the Enervex System. Replace the access doors on the fireplace body and the anchor.

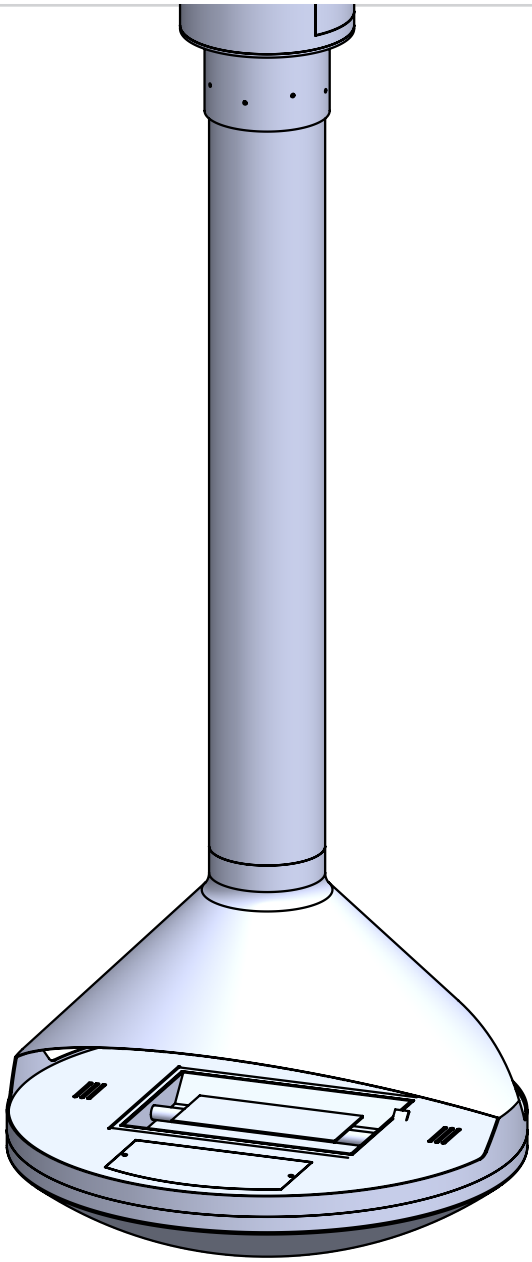

ASSEMBLY VIEW

5. Connecting the conduits for multiple flue sections. (If applicable)

Note: This step is only required if you havemultiple flue sections based on your ceiling height.

Fasten the Lower Conduit to the Upper Conduit pre-welded in the flue pipe before installing the multiple flue sections. The Upper Conduit has a gasket, glued to the bottom flange, which will ensure a tight seal when the lower conduit will be fastened to it. Repeat this step for as many sections of conduits supplied. Please refer to Figure 11 & 12.

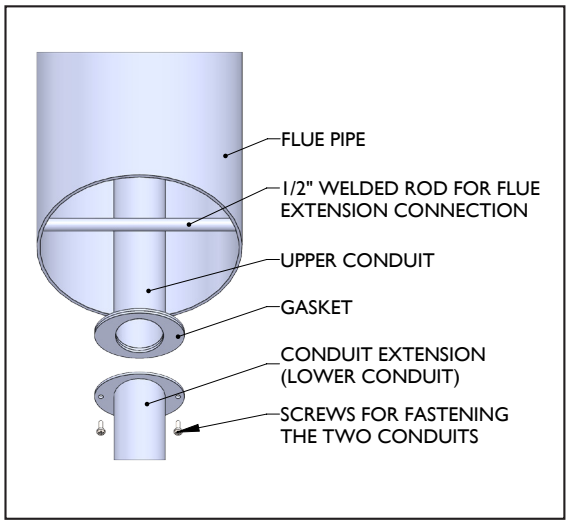

Figure.11

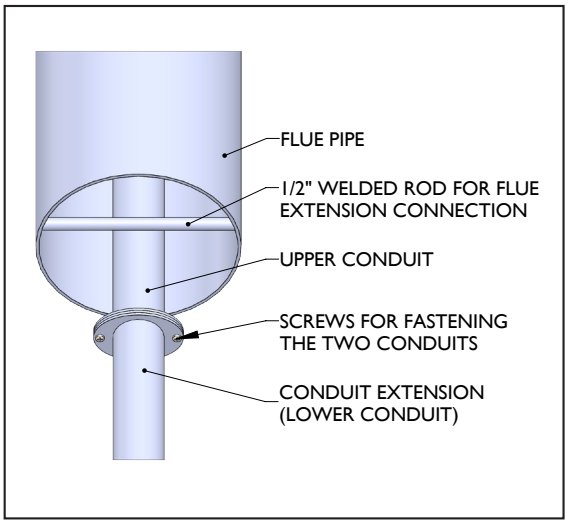

Figure.12

6. Install the multiple flue sections. (If applicable)

Note: This step is only required if you have multiple flue sections based on your ceiling height.

If multiple sections of flue are required based on ceiling height, a connection needs to be made between sections. This connection is made with a connecting collar that is mounted to the lower section of flue. The top of the flue has holes that are used to fasten together the two sections .Feed the flexible gas line down through the conduit in the flue pipes from the access door in the anchor. You can now raise the lower section of flue pipe with the male collar, into the upper piece of flue pipe.

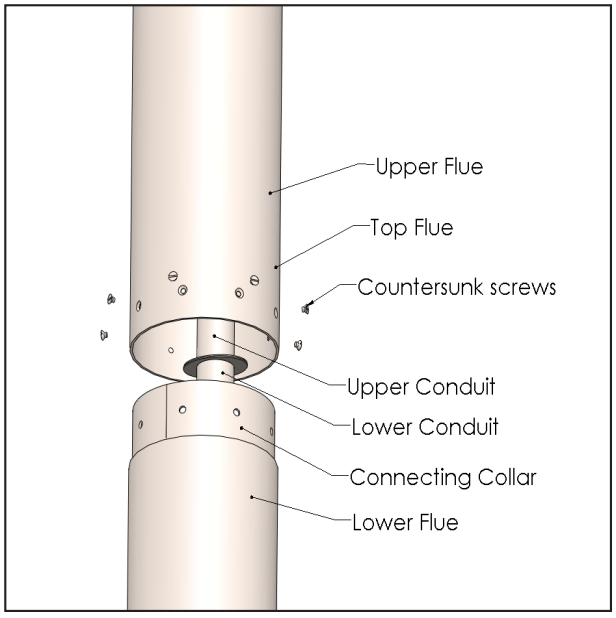

Figure.13

Repeat this step for as many sections of flue pipe supplied.

7. Install the Decorative Chimney (OPTIONAL) (VERTICAL TERMINATION)

If you have choosen to have the decorative chimney cover, please follow the instructions below to complete the installation on roof top.

The anchor assembly will have a pre-welded base for installing the decorative chimney. (See figure 14).

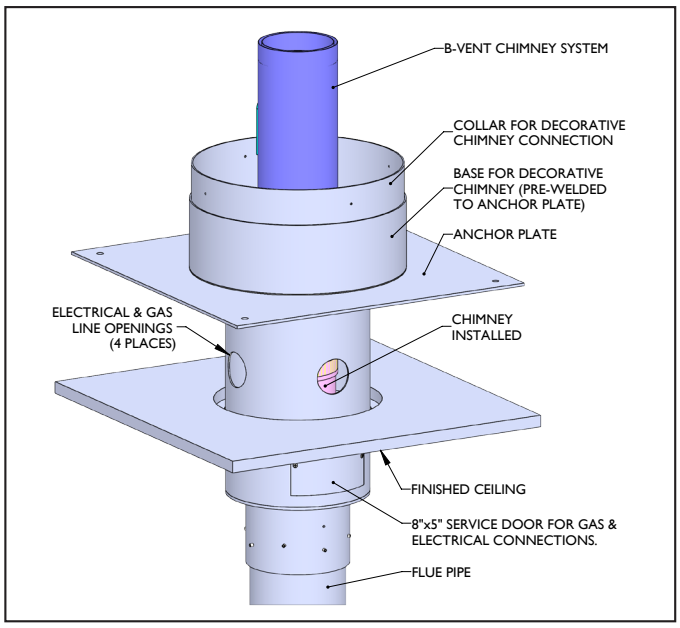

Figure.14

Before installing the decorative chimney, install all the B-Vent components on the chimney venting installation collar. Please refer to Appendix-B, Chimney Venting Installation for detailed installation steps. **DO NOT INSTALL THE ENERVEX COMPONENTS NOW.**

Install the decorative chimney middle section with pre-welded storm collar and conduit for an electrical wire run. Bring in all the electrical wires for ENERVEX wiring before you fasten the middle section to the base. Connect the silicone/copper tube from the PDS box to the SENSOR pre-installed in the B-vent. You can now fasten the middle section of the decorative chimney and install the ENERVEX components. (Automatic Damper, Chimney Adapter & Power Exhaust Fan). Please refer to Appendix-B for more information on the ENERVEX component installation.

NOTE: APPLY HIGH HEAT SILICONE AND SEAL ALL THE GAPS BETWEEN B-VENT AND STORM COLLAR. APPLY SILICONE TO THE SEAM OF THE B-VENT ABOVE THE STORM COLLAR.

You can now cover the ENERVEX fan and Damper with the last piece of Decorative Chimney, the top section which has ventilation slots in it. (See Figure. 15 & 16)

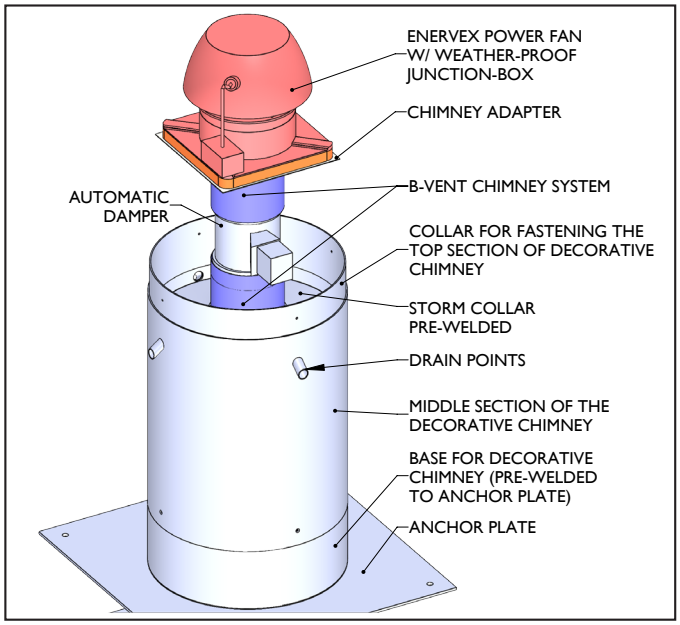

Figure.15

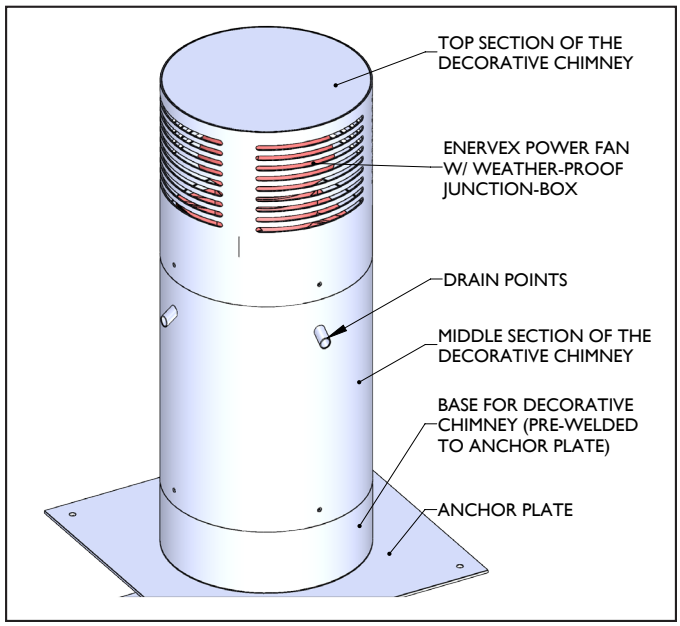

Figure.16

8. Install the Decorative Chimney (OPTIONAL) (HORIZONTAL TERMINATION)

If you have choosen to have the decorative chimney cover, please follow the instructions below to complete the installation at the wall outlet.

Ensure you have a hole in the wall to bring in the electrical for ENERVEX power exhaust fan. The connection with the damper and PDS sensor will be done from inside the wall within the ceiling structure.

Install the B-vent chimney system following the guidelines and instructions provided in Appendix-B Chimney & Venting Installation & Operation. Once the wall thimble has been installed and secured in place, you can now install the components that are numbered in the figure 17. Install all the component in the order they are numbered in the figure. 17

For connection with ENERVEX power fan please refer Appendix-B - Enervex intelli draft system instructions.

NOTE : ALL THE CONNECTIONS, SEAMS AND JOINTS OUTSIDE THE WALL SHALL BE SEALED WITH HIGH HEAT SILICONE TO PREVENT WATER ENTERING FROM OUTSIDE.

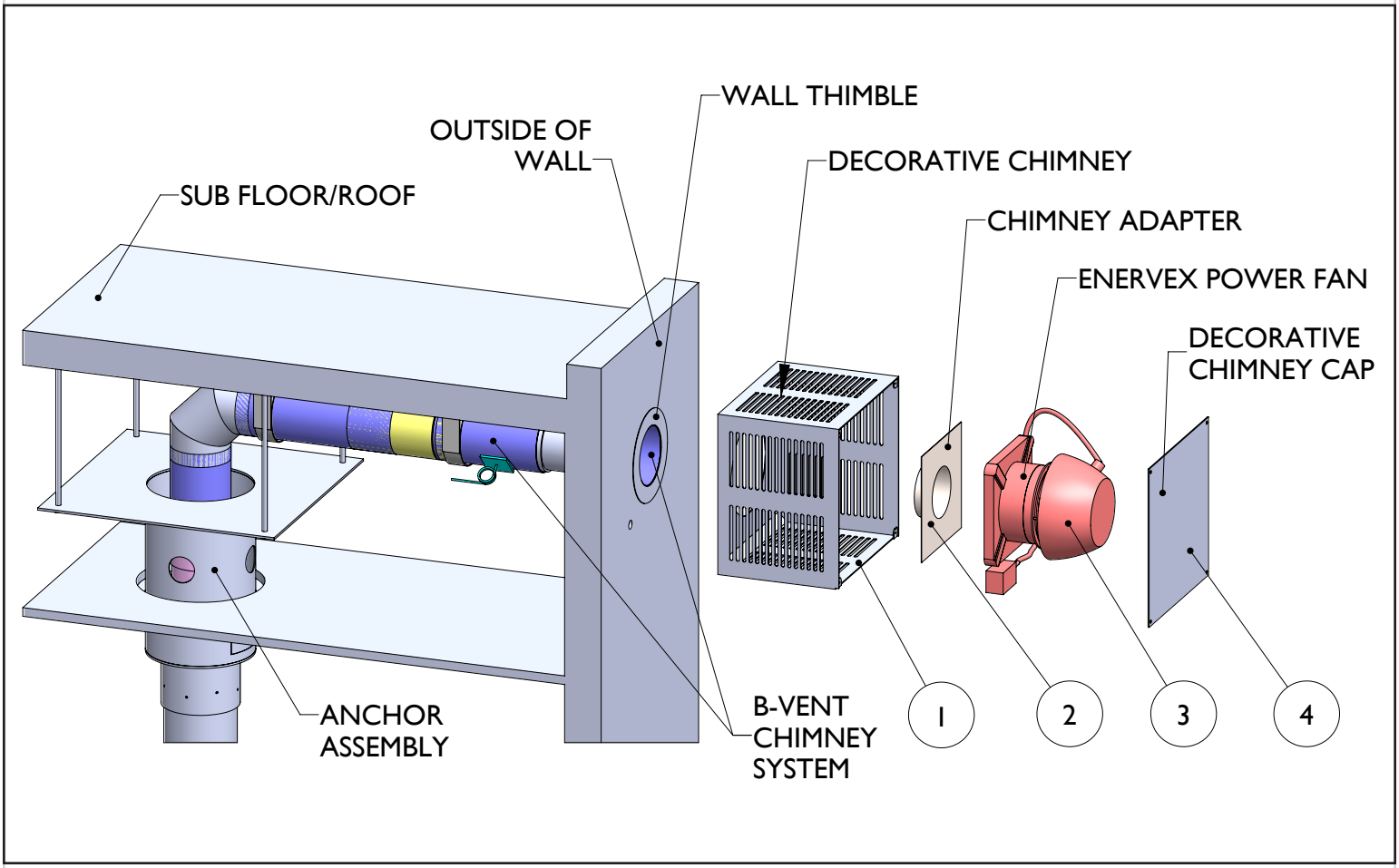

Figure.17

APPENDIX-B

BURNER INSTALLATION | OPERATION

This fireplace is pre-assembled with the burner installed and factory set.

Follow the instructions below for completing the Gas & Electrical Connections, test firing the Burner and adding Media.

Gas & Electrical Connections:

WARNING :

A qualified installer or service person must connect the appliance to gas supply. Follow all local codes.

WARNING :

Electrical connections should only be performed by a qualified, licensed electrician. Main power must be off when connecting to main electrical power supply or performing service. All wiring shall be in compliance with all local, city, and state codes. The appliance, when installed, must be electrically grounded in accordance with local codes, or in the absence of local codes, with the National Electrical Code ANSI/ NFPA 70 (latest edition) and Canadian Electrical Code, CSA C22.1.

Gas piping system must be sized to provide minimum inlet pressure (*listed on rating plate*) at the maximum flow rate (*BTU/hr*). Undue pressure loss will occur if the pipe is too small. When using copper or flex connectors use only fittings approved for gas connections.

1. Make sure the fireplace gas supply is turned off.
2. The Gas & Electrical connections are located in the fireplace and can be accessed through the access door on the fireplace.
3. Open the fireplace access door and connect the main Gas & Electrical line to the burner.
4. The fireplace has been manufactured with a hard-piped Gas connection or Flexible Gas line.

Leak Test:

Turn on the fireplace gas supply, and test at all connections for leaks using the appropriate soapy water or approved leak testing spray or electronic sniffer. If bubbles appear, a leak is present. Turn off the gas and tighten all connections. Repeat until no leaks are present.

Check for gas leaks at the burner, field made joints/gas shut off valve, and pilot too. If a leak persist, turn off the gas supply and contact the local gas company or dealer.

WARNING :

NEVER USE AN OPEN FLAME TO CHECK FOR LEAKS. IF USING A SOAP AND WATER SOLUTION TO TEST FOR LEAKS, DO NOT SPRAY SOLUTION ONTO THE ELECTRONIC PARTS.

Make sure the flame is even along the burner and appliance is fully operational and safe for use. Turn OFF the appliance and gas supply and let it cool before adding media.

Adding Burner Media

1. Evenly fill the media compartment with burner media (sand/crushed glass) fully covering the burner. If you are **NOT** planning to add optional topping media, then fill the media compartment in full.
2. If you are planning to add some topping media (optional colored glass or lava rock), leave approximately ¾" not filled on top of burner media.
3. Place and evenly distribute topping media (*optional colored glass or lava rock*) on top of burner media. Make sure that pilot opening is not blocked with media.
4. Place the heat shield over the controls and/or valve.

WARNING :

Important: Heat shields must be in place during operation of the gas burner system. Overheating of the valve and/or controls will cause shut down of the gas burner system or other operating problems.

WARNING :

Do not operate the fireplace without the burner being filled completely with media. Lighting the burner without the glass media will cause unsafe temperatures within the fireplace.

LIGHTING INSTRUCTIONS

Safety Information

This appliance is equipped with an ignition device which automatically lights the pilot. Do not try to light the pilot by hand.

BEFORE OPERATING smell all around the fireplace area for gas. Be sure to smell next to the floor because some gas is heavier than air and will settle on the floor.

WHAT TO DO IF YOU SMELL GAS:

- **Do not try to light any appliance.**
- **Do not touch any electric switch; do not use any phone in your building.**
- **Immediately call your gas supplier from a neighbor's phone.**
- **Follow the gas suppliers' instructions.**
- **If you cannot reach your gas supplier, call the fire department.**

Main gas valve in this fireplace is not serviceable and does not have any control knobs or switches to operate. Do not remove heat shields covering the valve and electronic devices; do not try to repair or modify the valve as it may result in a fire or explosion. Call a qualified service technician if you have any safety concerns.

Do not use this appliance if any part of it has been under water. Immediately call a qualified service technician to inspect the appliance and to replace any part of the control system and any gas control that has been under water.

For all valves, the air **MUST** be purged from the gas line before the pilot will light and burn properly. The time needed to purge will depend on the length of the gas line to the unit and the amount of time since the unit or gas line was last used. It may take several minutes before all the air is purged and the pilot will light and burn properly.

Operating Instructions

1. **STOP!** Read the safety information above.
2. Turn off any electrical components used with the burner system.
3. Verify that the wall switch is **OFF.**
4. Wait five (*5*) minutes to clear out any gas. If you smell gas, **STOP!** Follow the safety information above. If you don't smell gas, go to the next step.
5. Depress the wall switch to **ON.** This will activate the **ENERVEX Intelli Draft System** and transmits a rapid series of sparks at the pilot head located on the side of the burner. These sparks cease when the pilot flame is lit and stable. After a short time, the pilot will light the main burner.

⚠ CAUTION: IF THE GAS SET DOES NOT IGNITE WITHIN 20 SECONDS, STOP. TURN THE WALL SWITCH OFF, WAIT FOR FIVE (5) MINUTES TO CLEAR OUT ANY GAS, THEN REPEAT STEPS 3-5 ABOVE.

The pilot should remain lit. If it goes out, repeat steps 3 through 5 above. If the pilot will not stay lit after several tries, follow the instructions " To Turn Off Gas To Appliance" below and call your service technician or gas supplier.

TO TURN OFF GAS TO APPLIANCE

1. Turn off all electric power to the appliance.
2. If required, open the access door to access manual shutoff valve on gas line.
3. Turn the gas control manual valve to the full **OFF** position.
4. The burner will extinguish, and the pilot will go out.

INITIAL BURN-IN PROCESS

To fully cure the paint and ensure a long-lasting finish, the following burn-in procedure should be followed.

1. Turn on the fireplace and let it burn for 10 minutes then allow the fireplace to fully cool.
2. Turn on the fireplace and let it burn for 30 minutes then allow the fireplace to fully cool.
3. Turn on the fireplace and let it burn for 60 minutes then allow the fireplace to fully cool.

Note: During the final 60-minute burn, some smoke may be visible from the surface of the fireplace. There may also be an unpleasant odor. To mitigate this effect, ventilate the room with open windows and doors to provide airflow.

Health warning: The smoke from the paint curing process displaces oxygen. Small children, elderly folks, and persons with existing breathing problems should vacate the area around the unit during the paint curing process to avoid the discomfort of lost oxygen. The smoke is primarily Carbon Dioxide, and therefore non-toxic but it may lead to some discomfort.

A major cause of vent related fires is failure to maintain required clearances (air spaces) to combustible materials. It is of the utmost importance that Type B gas vent be installed only in accordance with these instructions.

Note: Read through all of these instructions before beginning your installation. Failure to install as described in this instruction will void the manufacturer's warranty, and may have an effect on your home-owner's insurance and UL listing status. Keep these instructions for future reference.

The placement of the vent and fittings must be in accordance with Local Codes, as well as accepted venting practices.

The Local Authority having jurisdiction should be consulted at this time. In most localities, building permits are required for any new appliances, or modifications to existing venting systems.

Clearance to Combustibles: A 1-inch clearance (*air space*) to combustible materials must be maintained, when using Round B-Vent, regardless of the pipe diameter.

Examine the area where the vent system will terminate. The height of the termination above the roof is determined by the roof pitch, and also it's proximity to adjacent walls or obstructions. Vent pipe with 3"-12" diameter must terminate at least 2 feet higher than an adjacent wall or obstruction, if it is within 8 feet. Vent pipe with 14" or larger diameter must terminate at least 2 feet higher than an adjacent wall or obstruction, if it is within 10 feet.

Your anchor has been equipped with a stop-disc, through which the chimney vent connector protrudes. When looking down into the body of the anchor from the opening at the top, you will see this plate. This plate acts as both a heat-stop and as a rest for the bottom of the chimney system.

Steps For Typical Installation

1. Building Code requires the fireplace to be located as close to the vent as possible. After consulting the local codes, fireplace installation instructions and any other applicable reference material determine the optimum location for the fireplace.
2. Locate and mark the center of the penetration point through the ceiling or the wall.
3. For a through-the-wall system, install the Wall Thimble, as shown in Figure 2. The Wall Thimble is designed to accommodate walls up to 6 inches thick. If you have thicker walls, a sleeve extension has been fabricated and attached to the existing sleeve. Do not fill the air space between the B-vent Pipe Section and the Wall Thimble with insulation, although an RTV-type sealant may be applied around the flange and nail heads if desired.

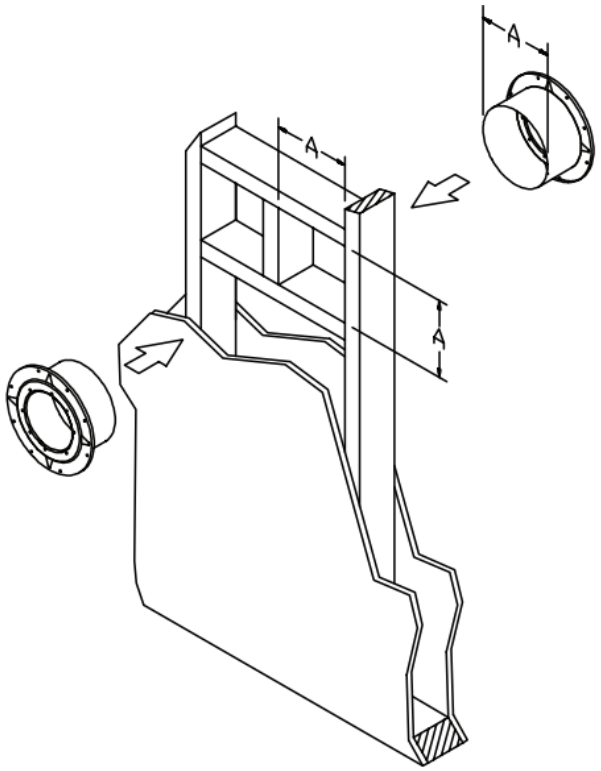

Figure 2

4. Sections of B-vent round pipe are joined together by lining up the female end of the locking lug with the male end slot, pushing them together, and turning clockwise to twist lock. Refer to Figure 9.
5. Sheet metal screws are not needed for 3" through 8" diameter pipe. However, if desired, use ¼-inch long sheet metal screws for 3" through 8" diameter pipe. Never penetrate the inner liner with screws.

For 10" through 16" diameter pipe, use a minimum of (*4*) ⅜" sheet metal screws per joint, and a minimum of (*6*) ⅜" sheet metal screws are required per joint for 18" and larger diameters. Each Pipe Section is labeled, and an arrow shows the direction of the exhaust flow.

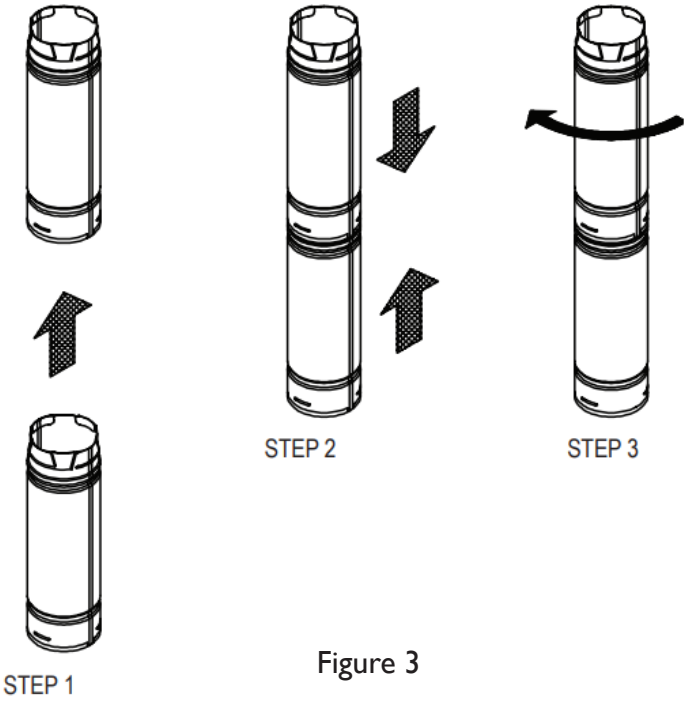

Figure 3

6. Only supplied connectors should be used between the fireplace and the venting system. Some fireplaces require Type B-Vent as a complete dedicated system from the flue collar of the fireplace to the termination of the vent to the outside atmosphere. If a B-vent connector is required, UL listed double wall Draft Hood Connector can be used.
7. When Elbows are required, strap the Pipe Sections and/or Elbows in place using Wall Straps. **Important: the offset must be supported with Wall Straps to prevent the weight from stressing the elbows.**
8. Wall Straps should be used to support the vertical pipe as needed to provide a secure installation. Wall Straps every four feet are required.
9. Any portion of the vent which passes through an occupied area must be enclosed, to prevent accidental damage to the system, as well as burns. Figure 1 shows a system which passes through an occupied second floor. Consult the Local Authority prior to construction. Note that the enclosure requires an access door for inspection and maintenance purposes.
10. Where the Pipe Sections pass through the roof, a hole must be cut to provide a minimum clearance (*air space*) of 1 inch between the Pipe and construction materials. A Roof Flashing is placed down over the pipe, and adjusted so it fits tightly against the roof, with the Pipe Section held in a position maintaining the 1 inch minimum clearance from combustibles. The Flashing is then nailed to the roof. The roofing material (*shingles, asphalt paper, etc.*) should overlap the top edge (*uphill side*) of the Flashing.
11. A non-hardening sealant should be used around the edges of the flashing base where it meets the roof. Non-hardening sealant is placed around the joint between the Flashing and the vertical Pipe Section. The Storm Collar is then placed over this joint, to make a watertight seal. (Figure 4)

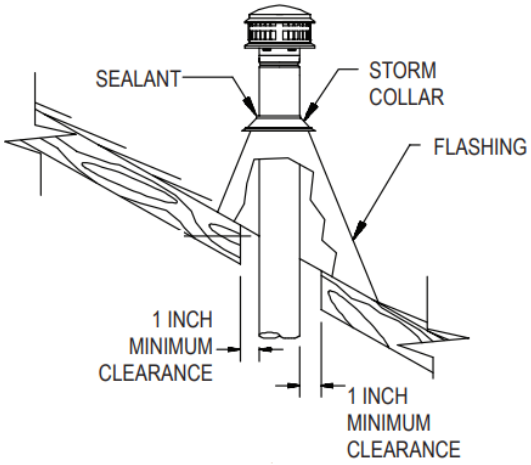

Figure 4

12. Conduct a final inspection to ensure that all joints are secure, the system is properly supported, and is mechanically sound. Especially verify that the one-inch clearance to combustibles requirement has been met, and that adequate combustion air will be furnished to the fireplace.

Adjustable Elbows

1. This section furnishes supplemental information concerning Adjustable Elbows, both 90° and 45°/60°.
2. In addition to twist locking the elbows, the connection may be further secured by using sheet metal screws at the joint where the male and female parts overlap, provided that the screws **DO NOT** penetrate the inner liner. One screw per joint is normally sufficient. Use #8 Pan Head sheet metal screws which are no longer than ¼ inch.
3. Wall Straps must be used to support each elbow. Do not allow the elbows to support the weight of the vent pipe.
4. The installer should apply pressure to the section at the points indicated by the arrows. This will prevent the adjacent sections of the elbow from turning, as the next pipe or fitting is twist-locked on. This is important, because once these sections start rotating, the elbow does no longer have a 90° angle. The Elbow is completely adjustable from 0° to 90°. Note: The centers of the upper sections tend to displace by a slight amount, as they are rotated. Again, screws (*not longer than¼"*) may be used to secure the joint. Wall Straps should also be utilized to enhance the stability of the vent system.

ENERVEX INTELLI DRAFT SYSTEM (OVERVIEW):

The Intelli Draft connects a draft and safety controller, the ADC100 and its pressure sensor, to an RS chimney fan, the MFD chimney damper and the fireplace's gas valve. When the user wants to turn on the fireplace (typically using a wall switch) the controller signals the mechanical chimney damper to open.

When the damper is open, the controller automatically ramps up the chimney fan speed until the draft set-point has been reached and the integrated draft protection switch closes.

At this point, the controller allows the fireplace to fire by opening the gas valve. During operation of the fireplace the control continues to monitor the draft and will maintain the proper draft set-point by modulating the chimney fan speed whenever needed.

When the user turns the fireplace or appliance off, the control leaves the damper open until all residual combustion products have been exhausted out of the building by the chimney fan; then the control discontinues chimney fan operation and closes the damper.

If for any reason the draft set-point can't be maintained during operation, the controller will completely shut down the fireplace or appliance operation.

Intelli Draft creates the safest operation for any gas-fired fireplace or decorative appliance and exceeds even the building codes' strictest safety requirements.

- Protects against downdrafts.
- Eliminates spillage and CO release due to building depressurization.
- Automatically shuts down fireplace operation, if conditions are unsafe.

Your chimney system has been supplied with an Enervex Power Vent System which must be installed in accordance with the manufacturer's instructions. Refer to ENERVEX component's installation Manual for more information and instructions on installation & maintenance.

CLEANING AND MAINTENANCE

WARNING:

Turn off gas before servicing fireplace. It is recommended that a qualified service technician perform these check-ups at the beginning of each heating season.

Once installed and operating properly, your fireplace will require regular maintenance. Burning the supplied media for any length of time will cause the fireplace to soot. Soot is caused because of incomplete combustion of the gas leaving behind a dark dense material. Soot will also accumulate, if the media is not placed in the properly. To clean off soot use an old tooth brush and gently rub away the soot where applicable.

The realistic flame produces carbon monoxide and soot. Under standard conditions these byproducts are exhausted up the chimney. IF the fumes or soot from the burning gas are evident in the room when the damper is fully open it indicates that the fireplace draft is defective. IF this happens **DO NOT** operate your fireplace until the fireplace draft is corrected, call a service technician to fix the problem.

Burner, Pilot And Control Compartment

Keep the control compartment clean by vacuuming or brushing at least twice a year or depending on your usage. Make sure the burner porting, pilot air opening and burner air openings are free of obstructions at all times. Inspect area around the burner. Remove any lint or foreign material with a brush or vacuum. Clean and readjust the burner air shutter. Clean and test the igniter and pilot (*if equipped*).

Pilot Flame

The flames from the pilot should be visually checked as soon as the unit is s installed and periodically during normal operation. The pilot flame must always be present when the fireplace is in operation or connected to the gas line with main shutoff valve open and the IPS activated (*powered*). The pilot flame has two distinct flames, one engulfing the flame sensor and the other reaching to the main burner.

Flame Description

Observe the flames. the flames should be blue at the base and a combination of blue/yellow at the body and tips. Inspect the flames periodically. If the flames appear different, contact a professional service technician or your gas supplier to correct the problem.

More frequent cleaning and maintenance may be necessary when burning propane gas than with natural gas. It is recommended to perform service and maintenance at the beginning of each fireplace season and as needed throughout the year, depending on your usage pattern and the environmental conditions in you home.

Before lighting your first fire it is necessary to clean off (*with a damp sponge and/or a dry cloth*) any dirt collected during transport or installation.

Actual scratches in the paint can be retouched solely with the touch-up paint provided. If this is necessary, ventilate the area thoroughly before lighting your fire to disperse any fumes generated in the spraying process.

The outer surfaces can be wiped with a soft, dry cloth (*making sure the metal is cool*). For continued use of the touch-up paint can (*following its initial usage*), invert the can (*spray nozzle down*) and spray into a balled-up newspaper until the can sprays clear. Clean the spray can bottom with a dry rag and store out of the reach of children.

Chimney Venting System

Have the venting system of the fireplace inspected and cleaned annually by a qualified agency.

An annual inspection is required to maintain warranty of your B-Vent system. You will need to inspect the Vent Pipe, Connector Pipe, and the connection to the fireplace.

Verify that the sealant around the Flashing and Storm Collar is intact. Reseal as needed.

CLEANING AND MAINTENANCE (*CONTINUED*)

Inspect vent for any physical damage or damage from corrosion. Look for any foreign material inside the vent. (*Example: bird's nest, leaves, etc.*)

Shine a light down inside of the vent pipe. Look for any evidence of damage, corrosion or excessive condensation. Also, look for any disconnected sections of the vent pipe or connector pipe. Refer to the installation instructions to reconnect pipe sections. If pipe sections are damaged or corroded, replace immediately!

Inspect fireplace connector and make sure that the vent is securely connected to the fireplace.

Damaged or corroded parts should be replaced immediately! Failure to do so can lead to an extremely hazardous situation!

Follow your manufacturer's recommended instructions for inspection your fireplace.

REPLACEMENTS

CAUTION : DO NOT USE SUBSTITUE MATERIAL!

For ordering replacement parts, please contact CF + D | custom fireplace design.

CLOSING

If there are any questions regarding any aspect of the work to be undertaken, please contact your Technical Representative at CF+D for assistance. We thank you for your support and your business!

Warranty

CF + D | custom fireplace design

QUALITY | CREATIVITY | INNOVATION

All CF + D and **VITA** I Fireplace models are guaranteed against any defect in design, construction, or manufacture, and guaranteed to function properly for five (5) years from date of receipt of goods. The electrical and electronic components within the fireplace are warranted against any defect in design, construction, or manufacture, and guaranteed to function properly for one (I) year from the date of commissioning. Our product guarantees are applicable only when our Fire Features have been installed with respect to all local building codes and with strict attention to the technical details outlined in our Plan Study, as well as our installation, maintenance, and user manuals. Our guarantee excludes accidental damage occurring during transportation without written notification upon receipt, damage incurred during installation, and damage resulting from improper use, and is limited to the repair or replacement of the defective part or unit in its entirety at the sole discretion of CF + D, the manufacturer. This warranty does not include the reimbursement of labor cost or related costs incurred to conduct the replacement of parts or entire unit should it be deemed necessary.

We thank you for your support and your business!

CF + D | custom fireplace design
5230 Harvester Rd. #2
Burlington, Ontario L7L 4X4
T: 905-681-3070
Toll Free: 1-866-909-3070
www.customfireplacedesign.com

North American Designed and Manufactured by CF + D | custom fireplace design

CF + D | custom fireplace design

5230 Harvester Rd. Unit #2
Burlington, Ontario Canada L7L 4X4
t. 1-866-909-3070 t. 905-681-3070
www.customfireplacedesign.com