VITA | Fireplaces

North American Designed & Manufactured by CF + D | custom fireplace design



Image shown is for illustration purpose and may include some optional features.

96” Single-Sided

Built-In Linear Fireplace with Vapor-Fire Burner

LAYOUT DRAWING

REV. 2 • DEC. 2025

CF + D | custom fireplace design

www.customfireplacedesign.com

VITA | Fireplaces

96” Single-Sided | Built-In Linear Fireplace with Vapor-Fire Burner

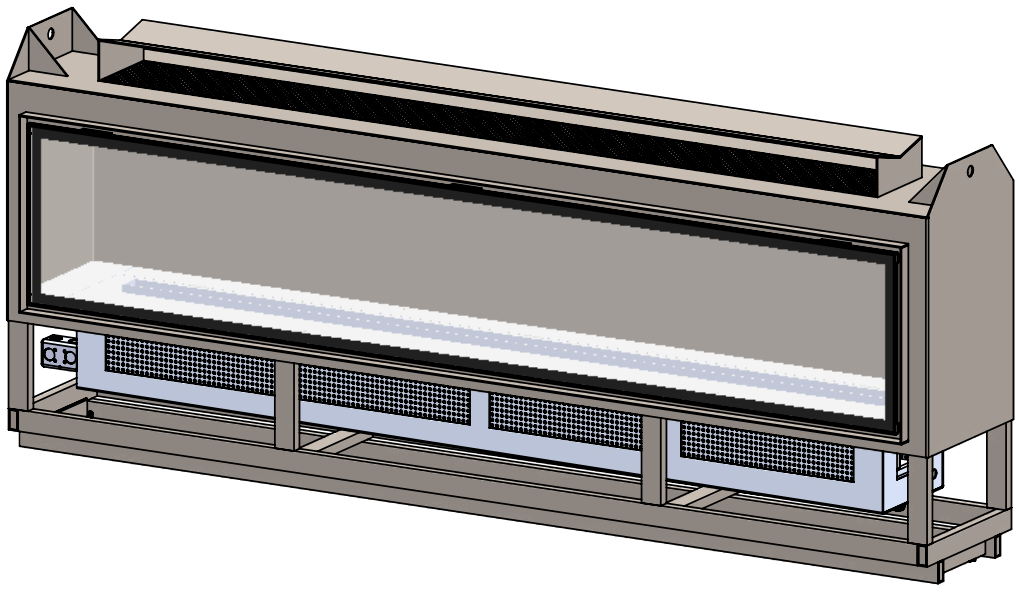

NOTE: DEDICATED WALL SWITCH REQUIRED FOR OPERATION

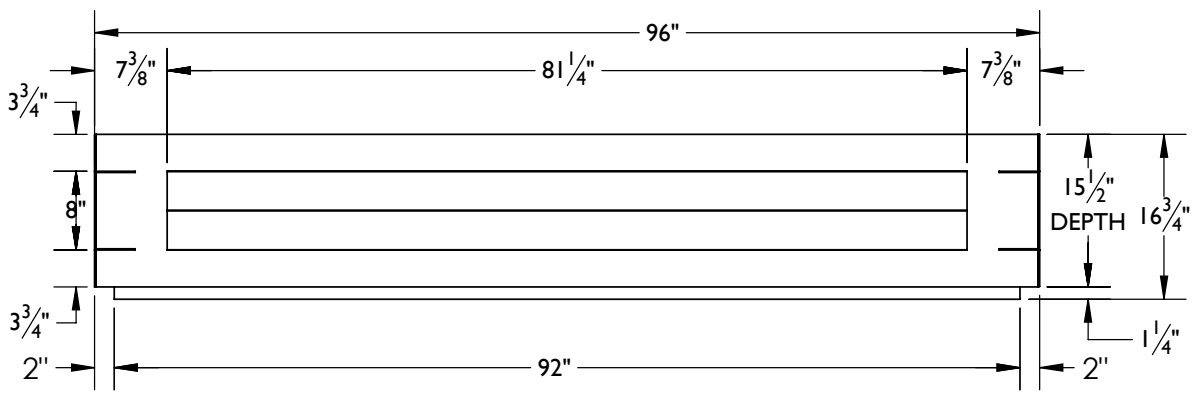

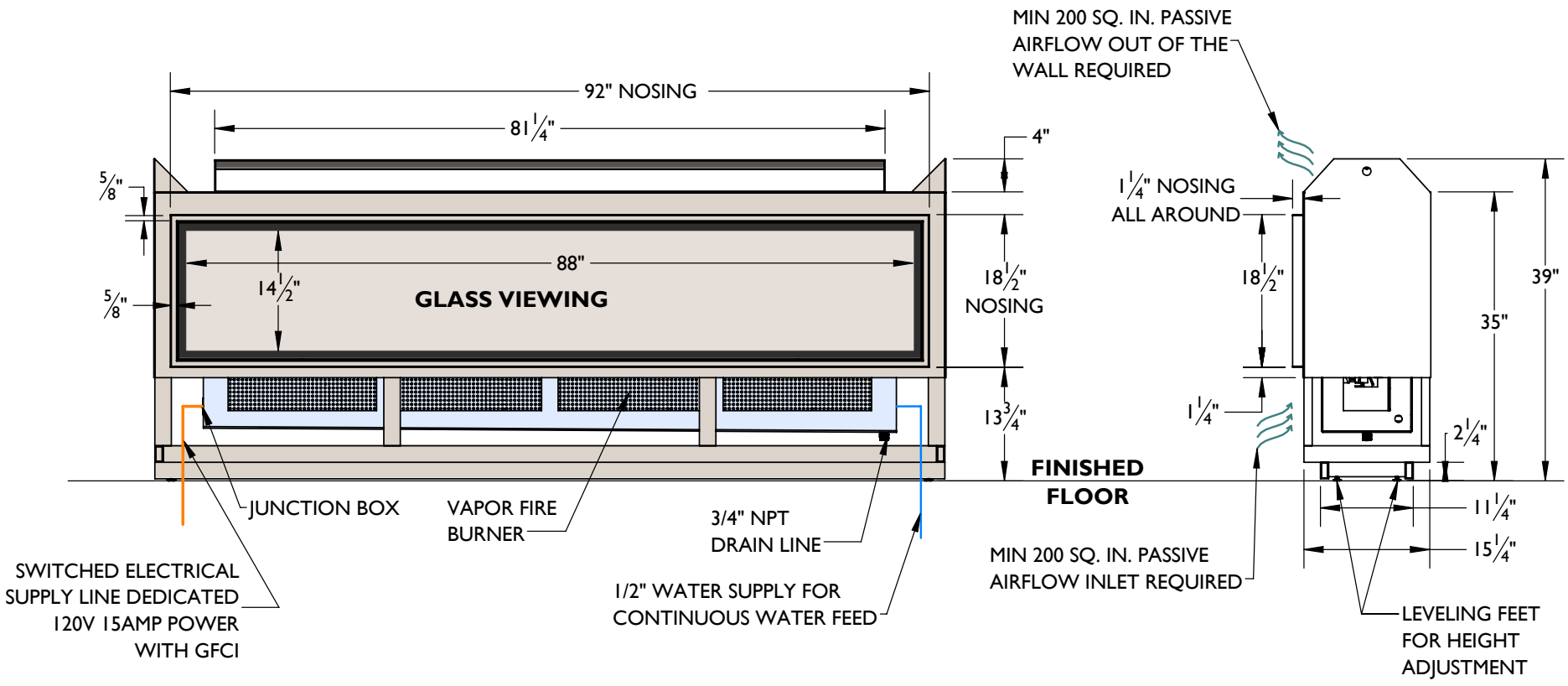

Fireplace Weight	600 lbs. approx.
Burner	4 X CDFI500P
Total Burner Length	80” Vapor-Fire Burner
Airflow Requirements	200 Sq. Inches

PROPRIETARY AND CONFIDENTIAL
THE INFORMATION CONTAINED IN THIS DRAWING IS THE SOLE PROPERTY OF **CUSTOM FIREPLACE DESIGN INC.** ANY REPRODUCTION IN PART OR AS A WHOLE WITHOUT THE WRITTEN PERMISSION OF **CUSTOM FIREPLACE DESIGN INC.** IS PROHIBITED.

UNLESS OTHERWISE SPECIFIED:

DIMENSIONS ARE IN INCHES
TOLERANCES:
FRACTIONAL ±
ANGULAR: MACH ± BEND ±
TWO PLACE DECIMAL ±
THREE PLACE DECIMAL ±

INTERPRET GEOMETRIC TOLERANCING PER:

MATERIAL

FINISH

DO NOT SCALE DRAWING

	NAME	DATE
DRAWN	MP	3/25/2019
CHECKED	MV	3/25/2019
ENG APPR.		
MFG APPR.		
Q.A.		

CF + D
CUSTOM FIREPLACE DESIGN INC.
5230 HARVESTER RD. UNIT # 2
BURLINGTON, ONTARIO CANADA L7L 4X4
PHONE: 905-681-3070 FAX: 905-681-8697

MODEL: **96” Single-Sided**

TITLE: **LAYOUT DRAWING**

SIZE	DWG. NO.	REV
A	LVF-07	2

SCALE: NTS **SHEET 2 OF 3**

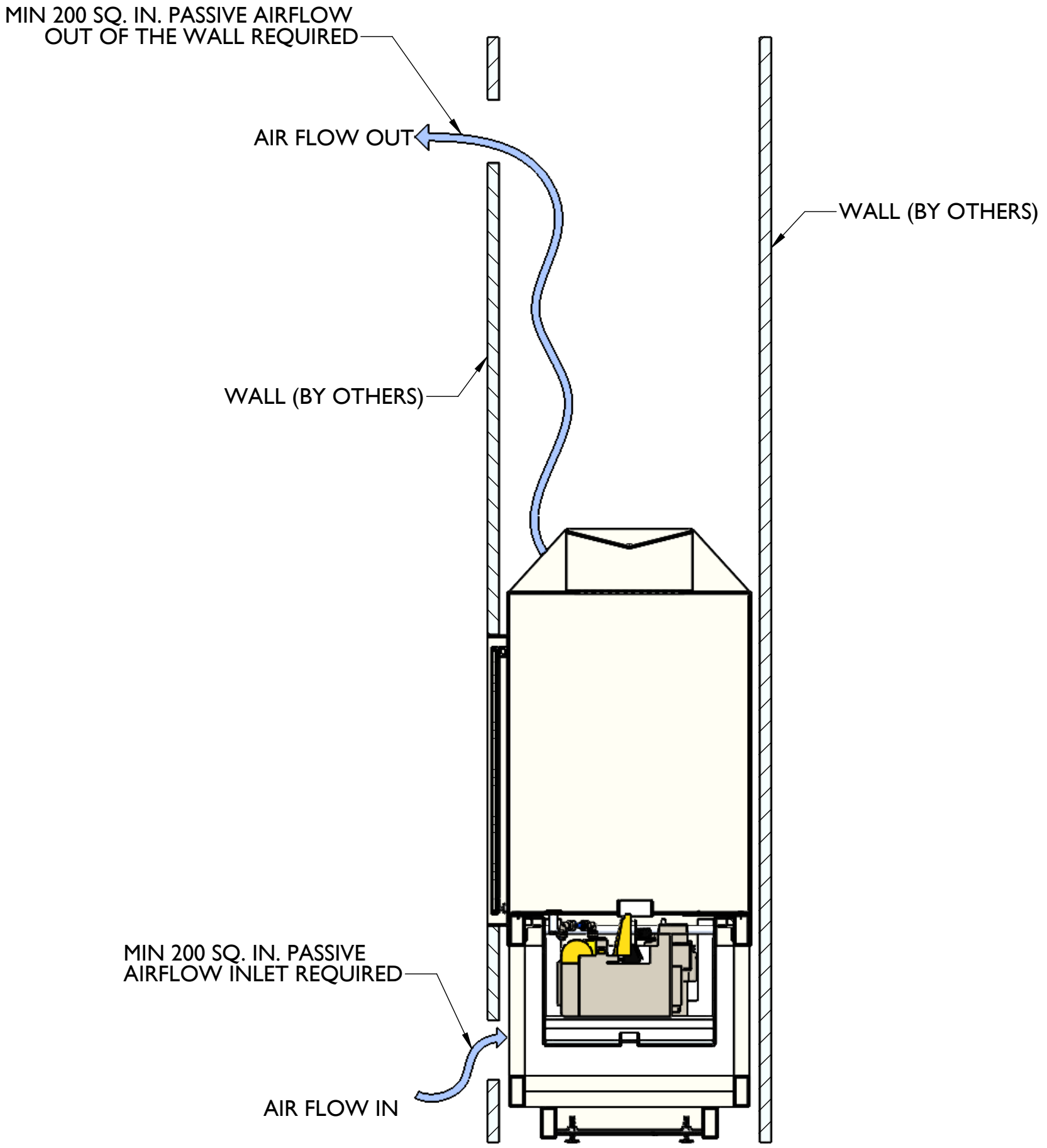

SIDE SECTION VIEW

VITA | Fireplaces

96" Single-Sided | Built-In Linear Fireplace with Vapor-Fire Burner

Product Information

- Vapor-Fire burner technology
- Realistic flame without heat
- No chimney venting requirements
- Safe to the touch
- Fueled by regular tap water
  (softened/filtered water if required)
- 120 Volt 15 Amp-GFCI
- All fireplaces factory Flat Black finish
- Custom Client finishes are available by request. Sample required.
- Dedicated wall switch required for operation
- Heat available
- 2" framing clearance required for installation

WATER SOURCE OPTIONS

OPTION 1: Plumbed-In to main source water line, ½" reduced to ¼" factory set connection.

OPTION 2: Removable 1L container for manual fill approx. 8-10 hour burn time.

Recommended: ¾" drain line to a 1½" floor drain OR condensate pump OR moisture alarm for potential leak management. (Not mandatory)

Note: Exact measurements may vary ±½".

North American Designed & Manufactured
by
CF + D | custom fireplace design

UNLESS OTHERWISE SPECIFIED:

DIMENSIONS ARE IN INCHES
TOLERANCES:
FRACTIONAL ±
ANGULAR: MACH ± BEND ±
TWO PLACE DECIMAL ±
THREE PLACE DECIMAL ±

INTERPRET GEOMETRIC TOLERANCING PER:

MATERIAL

FINISH

DO NOT SCALE DRAWING

	NAME	DATE
DRAWN	MP	3/25/2019
CHECKED	MV	3/25/2019
ENG APPR.		
MFG APPR.		
Q.A.		

CF + D
CUSTOM FIREPLACE DESIGN INC.
5230 HARVESTER RD. UNIT # 2
BURLINGTON, ONTARIO CANADA L7L 4X4
PHONE: 905-681-3070 FAX: 905-681-8697

MODEL: **96" Single-Sided**

TITLE: **AIRFLOW REQUIREMENT**

SIZE	DWG. NO.	REV
A	LVF-07	2

SCALE: NTS **SHEET 3 OF 3**

PROPRIETARY AND CONFIDENTIAL
THE INFORMATION CONTAINED IN THIS DRAWING IS THE SOLE PROPERTY OF **CUSTOM FIREPLACE DESIGN INC.** ANY REPRODUCTION IN PART OR AS A WHOLE WITHOUT THE WRITTEN PERMISSION OF **CUSTOM FIREPLACE DESIGN INC.** IS PROHIBITED.