VITA | Fireplaces

North American Designed & Manufactured by CF + D | custom fireplace design



Image shown is for illustration purpose and may include some optional features.

MAXIM | Suspended Hood with Base Fireplace and Vapor-Fire Burner

LAYOUT DRAWING

REV. 1 • NOV. 2026

CF + D | custom fireplace design

www.customfireplacedesign.com

VITA | Fireplaces

MAXIM | Suspended Hood with Base Fireplace and Vapor-Fire Burner

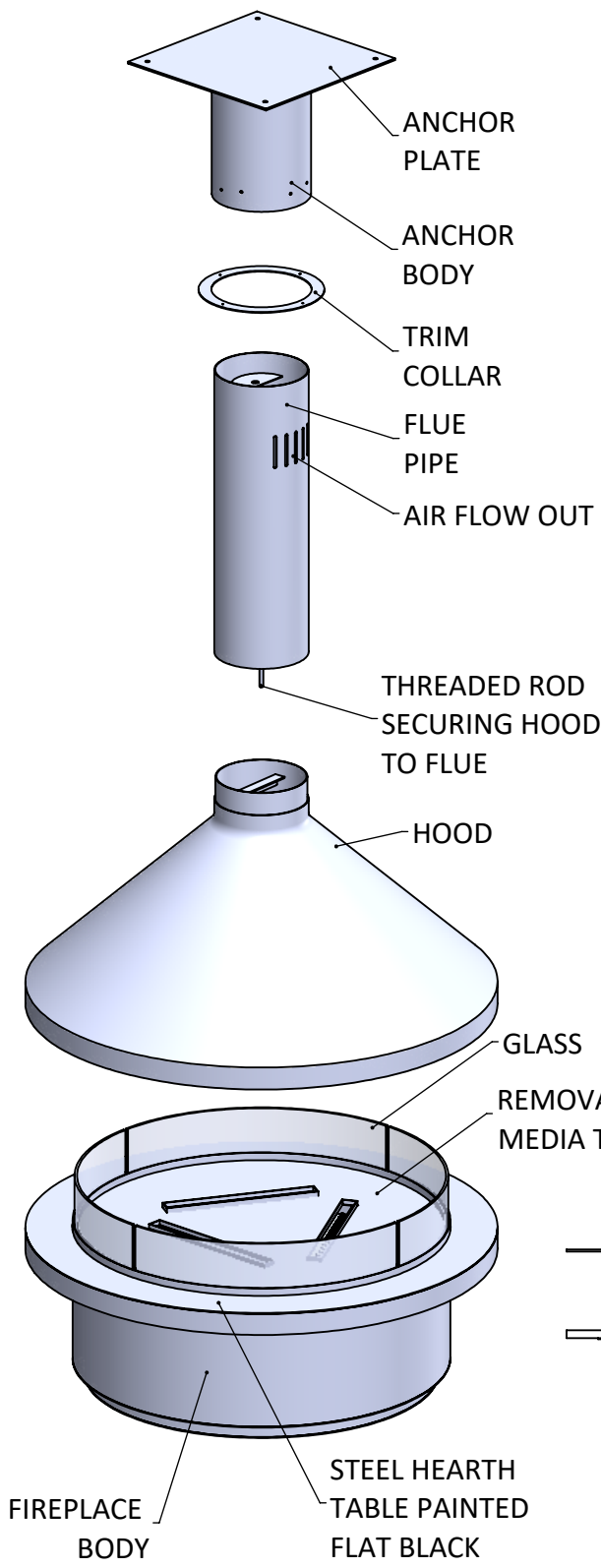

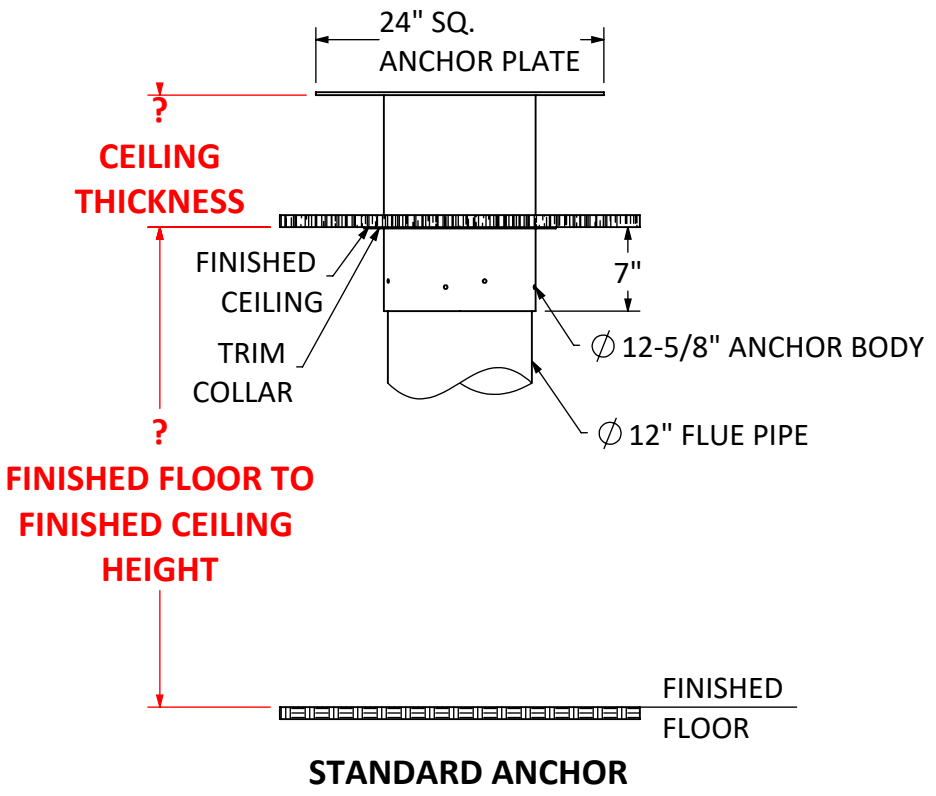

STANDARD ANCHOR

NOTE: Dedicated wall switch required for operation.

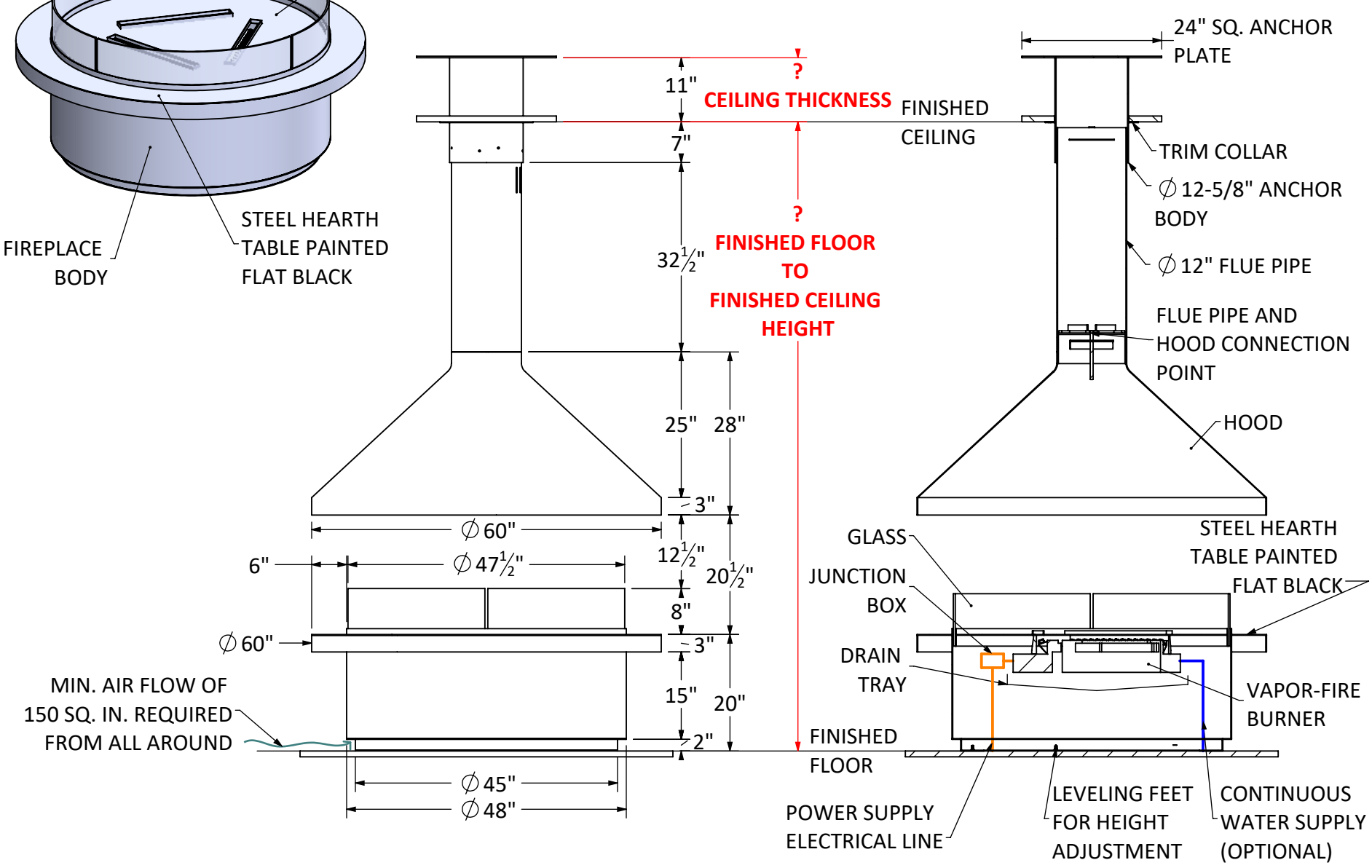

Shown with Standard 9 ft. Flat Ceiling Application
with Vapor-Fire
Custom Lengths & Anchor Options Available

SECTION B-B
SCALE 1 : 24

Anchor	78 lbs. approx.
Flue & Hood	190 lbs. approx.
Fireplace Body	402 lbs. approx.
Total Fireplace Weight	670 lbs. approx.

*Each add'l. 1 ft. of flue pipe weighs: approx. 11 lbs.

PROPRIETARY AND CONFIDENTIAL
THE INFORMATION CONTAINED IN THIS DRAWING IS THE SOLE PROPERTY OF **CUSTOM FIREPLACE DESIGN INC.**
ANY REPRODUCTION IN PART OR AS A WHOLE WITHOUT THE WRITTEN PERMISSION OF **CUSTOM FIREPLACE DESIGN INC.**
IS PROHIBITED.

UNLESS OTHERWISE SPECIFIED:

DIMENSIONS ARE IN INCHES
TOLERANCES:
FRACTIONAL ±
ANGULAR: MACH ± BEND ±
TWO PLACE DECIMAL ±
THREE PLACE DECIMAL ±

INTERPRET GEOMETRIC TOLERANCING PER:

MATERIAL

FINISH

DO NOT SCALE DRAWING

	NAME	DATE
DRAWN	MP	4/18/2019
CHECKED	MV	4/18/2019
ENG APPR.		
MFG APPR.		
Q.A.		

CF + D
CUSTOM FIREPLACE DESIGN INC.
5230 HARVESTER RD. UNIT # 2
BURLINGTON, ONTARIO CANADA L7L 4X4
PHONE: 905-681-3070 FAX: 905-681-8697

MODEL: **MAXIM**

TITLE: **LAYOUT DRAWING**

SIZE	DWG. NO.	REV
A	FMVF-04	0

SCALE: NTS **SHEET 2 OF 3**

CUSTOM ANCHOR OPTIONS AVAILABLE

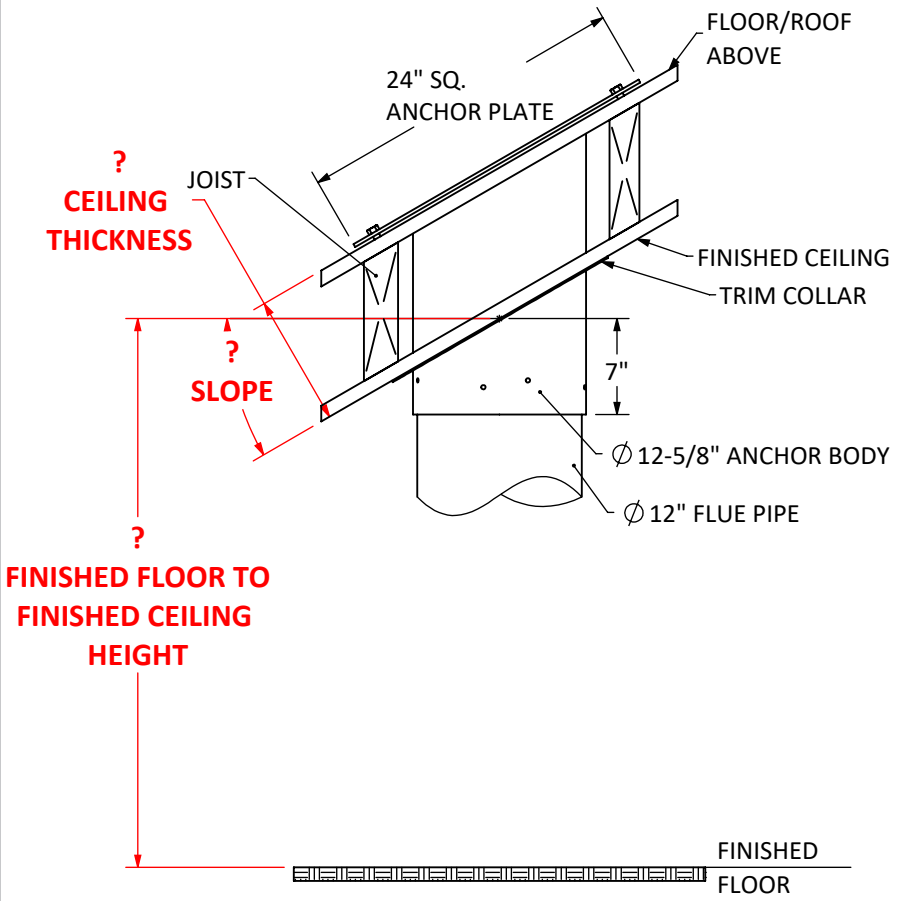

OPTION A - SLOPED DROP FROM ABOVE

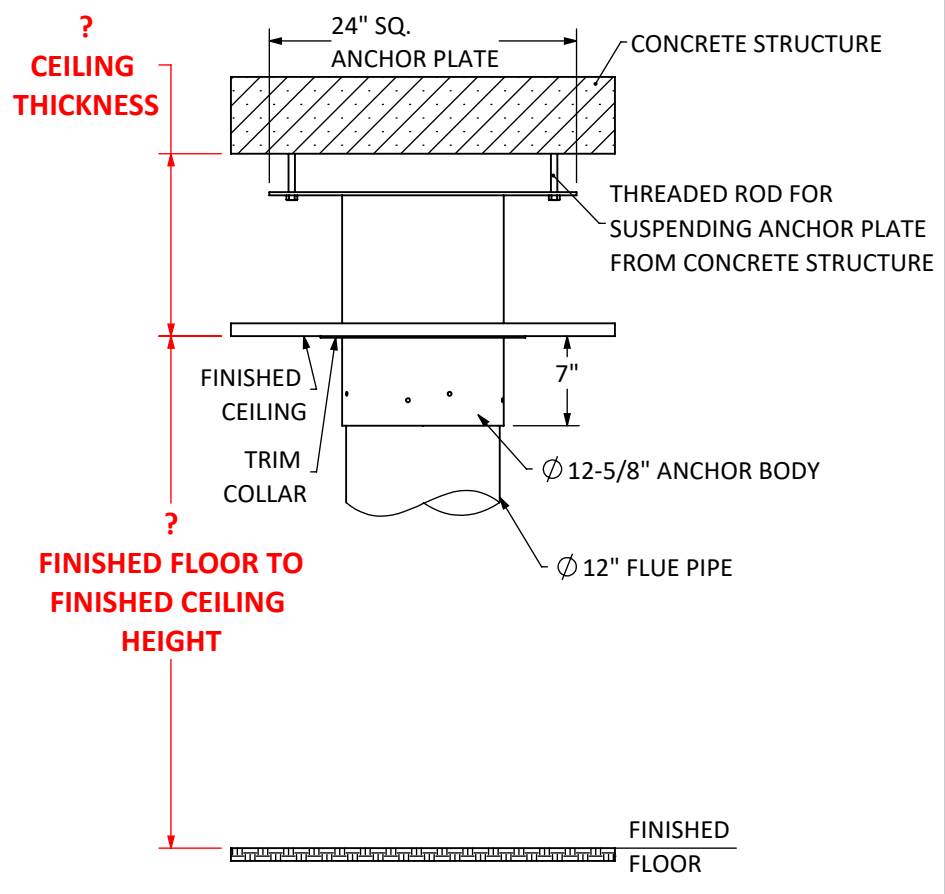

OPTION B - SUSPENDED FROM CONCRETE

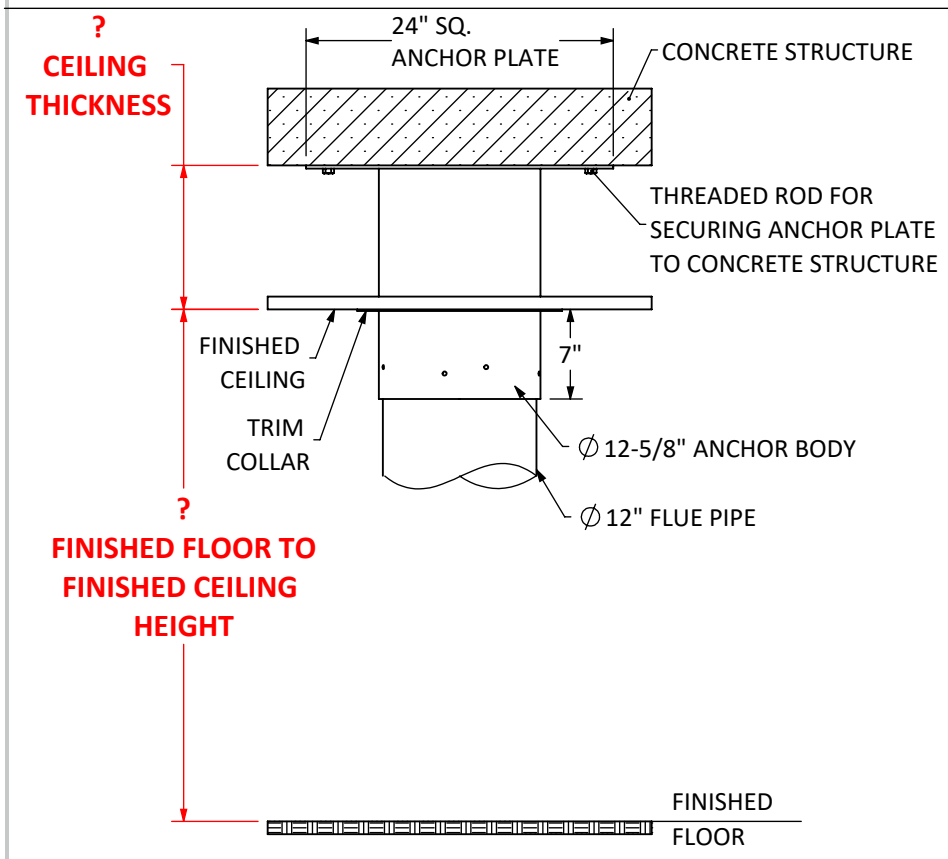

OPTION C - ATTACHED BELOW CONCRETE

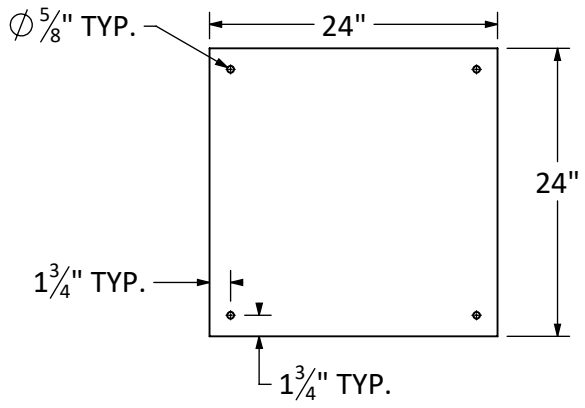

ANCHOR PLATE
24" SQ. x 0.25" THK.

VITA | Fireplaces

MAXIM | Suspended Hood with Base Fireplace and Vapor-Fire Burner

Product Information

- Vapor-Fire burner technology
- Realistic flame without heat
- No chimney venting requirements
- Safe to the touch
- Fueled by regular tap water (softened/filtered water if required)
- 120 Volt 15 Amp-GFCI
- Main electrical and optional continuous water line to feed from floor to junction box located inside fireplace base.
- All fireplaces factory Flat Black finish
- Custom Client finishes are available by request. Sample required.
- Dedicated wall switch required for operation
- Heat available, most models

WATER SOURCE OPTIONS

OPTION 1: Plumbed-In to main source water line, ½" reduced to ¼" factory set connection.

OPTION 2: Removable 1L container for manual fill approx. 8-10 hour burn time.

Recommended: ¾" drain line to a 1½" floor drain OR condensate pump OR moisture alarm for potential leak management. (Not mandatory)

Note: Exact measurements may vary ±½".

North American Designed & Manufactured by

CF + D | custom fireplace design

UNLESS OTHERWISE SPECIFIED:		NAME	DATE
DIMENSIONS ARE IN INCHES TOLERANCES: FRACTIONAL ± ANGULAR: MACH ± BEND ± TWO PLACE DECIMAL ± THREE PLACE DECIMAL ±	DRAWN	MP	4/18/2019
	CHECKED	MV	4/18/2019
	ENG APPR.		
	MFG APPR.		
INTERPRET GEOMETRIC TOLERANCING PER:	Q.A.		
MATERIAL			
FINISH			
DO NOT SCALE DRAWING			

PROPRIETARY AND CONFIDENTIAL
THE INFORMATION CONTAINED IN THIS DRAWING IS THE SOLE PROPERTY OF **CUSTOM FIREPLACE DESIGN INC.** ANY REPRODUCTION IN PART OR AS A WHOLE WITHOUT THE WRITTEN PERMISSION OF **CUSTOM FIREPLACE DESIGN INC.** IS PROHIBITED.

CF + D
CUSTOM FIREPLACE DESIGN INC.
5230 HARVESTER RD. UNIT # 2
BURLINGTON, ONTARIO CANADA L7L 4X4
PHONE: 905-681-3070 FAX: 905-681-8697

MODEL: **MAXIM**

TITLE: **CUSTOM ANCHOR OPTIONS**

SIZE	DWG. NO.	REV
A	FMVF-04	0

SCALE: NTS **SHEET 3 OF 3**